SEPTEMBER 24, 2024

CONTRACT NO. 1799

SOLIDS THICKENING AND DEWATERING IMPROVEMENTS

ADDENDUM NO. 3

All bidders bidding **Contract No. 1799** shall read and take note of this **Addendum No. 3.** The Procurement Documents for **Contract No. 1799 SOLIDS THICKENING AND DEWATERING IMPROVEMENTS** are hereby revised and/or clarified as stated below.

Acknowledgement of Contract No. 1799 Addendum No. 3

The Acknowledgement attached to **Addendum No. 3** is to be signed and returned immediately via email to **Kathleen P. Uniatowski** at kathleen.uniatowski@alcosan.org and acknowledged with Bidder's Proposal.

Kimberly Kennedy

Kimberly Kennedy, P.E.

Director – Engineering and Construction

3300 Preble Avenue • Pittsburgh, PA 15233-1092 • ph: 412.766.4810
www.alcosan.org

ACKNOWLEDGEMENT OF

CONTRACT NO. 1799

SOLIDS THICKENING AND DEWATERING IMPROVEMENTS

ADDENDUM NUMBER 3

FIRM NAME: _____

SIGNATURE: _____

TITLE: _____

DATE: _____

SEPTEMBER 24, 2024

CONTRACT NO. 1799

SOLIDS THICKENING AND DEWATERING IMPROVEMENTS

ADDENDUM NO. 3

ADDENDUM NO. 3

ALLEGHENY COUNTY SANITARY AUTHORITY
PITTSBURGH, PENNSYLVANIA

CONTRACT NO. 1799
SOLIDS THICKENING AND DEWATERING IMPROVEMENTS PROJECT

SEPTEMBER 24, 2024

BID OPENING DATE
FRIDAY, OCTOBER 4, 2024
11:00 A.M.

This Addendum No. 3 consists of 33 pages and the following attachments:

Attachment A – Section 09 96 79 "Atmospheric Protection and Plant Service Areas Coatings" – 8 ½" x 11" (14 pages)
Attachment B – Section 23 31 16 "Non-Metal Ducts" – 8 ½" x 11" (6 pages)
Attachment C – Addendum No. 3 Drawings – 22" x 34" (18 pages)

ATTENTION BIDDERS

The following additions to and modifications of the Contract Documents will be included in and become part of the Contract for the Allegheny County Sanitary Authority (ALCOSAN) – Solids Thickening and Dewatering Improvements Project. Bidders are instructed to take the following into account in rendering any Bid for this work.

The Bidder is responsible for verifying that he/she has received and reviewed all of the pages of the Contract Documents as well as all of the pages and attachments of all addenda. The Bidder shall verify all pages with the table of contents in the Contract Documents and the first page of all Addenda. Receipt of this Addendum No. 3 must be noted on the Bid Form. These items modify the portions of the documents specifically noted; all other provisions of the Contract Documents shall remain in effect.

1. CHANGES TO THE BIDDING DOCUMENTS

1.1 In Article 4, on page 4-4G, Para. 2, **DELETE** "614 calendar days" and **REPLACE** with "586 calendar days."

1.2 In Article 4, in the table on page 4-4G, **DELETE** "614 days" required for Partial Substantial Completion of Contract 1799G and **REPLACE** with "586 days."

1.3 In Article 4, on page 4-4E, Para. 2, **DELETE** "614 calendar days" and **REPLACE** with "586 calendar days."

1.4 In Article 4, in the table on page 4-4E, **DELETE** "614 days" required for Partial Substantial Completion of Contract 1799E and **REPLACE** with "586 days."

1.5 In Article 4, on page 4-2H, Para. 2, **DELETE** "614 calendar days" and **REPLACE** with "586 calendar days."

1.6 In Article 4, in the table on page 4-2H, **DELETE** "614 days" required for Partial Substantial Completion of Contract 1799H and **REPLACE** with "586 days."

1.7 In Article 4, on page 4-2P, Para. 2, **DELETE** "614 calendar days" and **REPLACE** with "586 calendar days."

1.8 In Article 4, in the table on page 4-2P, **DELETE** "614 days" required for Partial Substantial Completion of Contract 1799P and **REPLACE** with "586 days."

2. CHANGES TO THE TECHNICAL SPECIFICATIONS

2.1 In Table of Contents – Volume II, **DELETE** Specification Section "09 91 23 INTERIOR PAINTING."

2.2 In Table of Contents – Volume II, **ADD** Specification Section "23 09 23.14 Flow Switches" that was added in Addendum No. 2 after Specification Section "23 07 19 HVAC PIPING INSULATION."

2.3 In Table of Contents – Volume II, **ADD** Specification Section "23 31 16 NON-METAL DUCTS" after Specification Section "23 32 13 METAL DUCTS."

2.4 In Specification Section 01 11 00 "Summary of Work," **ADD** the following after Para. 1.2.A.1.v.:

"w. Opening and closing the first and second floor access hatches with the bridge crane in the Dewatering Building. Provide protection and restrict access to area while floor hatches are open."

2.5 In Specification Section 01 11 00 "Summary of Work," **DELETE** Para. 1.2.A.2.j.1 and **REPLACE** with the following:

"1) Polymer control panels (PMX011-400CP and PMX012-400CP) to be skid mounted and provided under the General Contract."

2.6 In Specification Section 01 11 00 "Summary of Work," **DELETE** Para. 1.4.A.9 and **REPLACE** with the following:

"9. Not used."

2.7 In Specification Section 01 52 00 "Maintenance of Plant Operations," **DELETE** Para.'s 1.2.G.2 and 3 in their entirety and **ADD** the following paragraphs after Para. 1.2.G.1:

"2. The second phase sludge thickening testing program to include the remaining two WAS grinders, the remaining thickening feed tank with its associated new mixer, the remaining three thickening feed pumps, the remaining three gravity belt thickeners with associated washwater booster pumps, the remaining thickened sludge sump with its associated two TWS pumps, the remaining TWS pump discharge header, the remaining dewatering feed tank, the remaining polymer mixing unit and remaining three polymer feed pumps.

3. After successful operation of this equipment for five days (during the second Facility Startup) without faults/shutdowns, partial acceptance of the equipment can be obtained. Final acceptance of the entire sludge thickening system will be provided when all required performance tests on its individual components have been completed and approved.

4. Final acceptance of the entire thickening system with all its associated components must be completed by the interim construction milestone for Partial Substantial Completion of Contract 1799 as defined in Article 4 of the Contract Agreement."

2.8 In Specification Section 01 30 00 "Special Conditions," **DELETE** Para. 1.4.B.1.b. in its entirety.

2.9 In Specification Section 01 50 00 "Construction Facilities and Temporary Controls and Utilities," **ADD** the following after Para. 1.10.H.:

"I. Temporary heating to be the responsibility of the General Contractor."

2.10 In Specification Section 01 50 00 "Construction Facilities and Temporary Controls and Utilities," **DELETE** Para. 1.14.B in its entirety.

2.11 In Specification Section 01 50 00 "Construction Facilities and Temporary Controls and Utilities," **ADD** the following after 1.30.C.:

"D. Each Prime Contractor will be allowed a maximum of four vehicles onsite at any time regardless the number of subcontractors onsite."

2.12 In Specification Section 01 45 25 "Testing Concrete Structures for Watertightness," **DELETE** Para. 3.2.B in its entirety and **REPLACE** with "Not used."

2.13 In Specification Section 01 52 00 "Maintenance of Plant Operation," **ADD** the following after Para. 1.17 and renumber Paragraphs 1.18 through 1.33 accordingly:

"1.18 WORK AREA 400.13 - DEWATERING BUILDING – Construction of GBT Mezzanine

A. Work Area 400.13 – GBT Mezzanine

1. General Description:

a. Construct new GBT Mezzanine as shown on the Contract Drawings.

b. This work area does not have an anticipated process shutdown.

c. Construct Work Area 400.13 in the sequence specified herein.

2. Maximum Duration:

a. Duration shall match the times established in the Contractor's construction schedule.

b. This work must be completed and accepted before installation of the GBTs on the mezzanine.

3. Work Sequence:

a. Install steel framing at the GBT Mezzanine and Control Room.

b. Install welds at the base of the interior columns as shown in Detail A /400-S-102.

c. Install vertical bracing between columns C2 and C3 as shown on Section 1 / 400-S-120.

d. Install concrete floors at the GBT Mezzanine and Control Room.

e. Complete remaining work for GBT Mezzanine and Control Room."

2.14 In Specification Section 09 29 00 "Gypsum Board," **DELETE** Para. 3.5.D.1.a. and **REPLACE** with the following:

"a) Primer and finish paint shall be as specified in Section 09 96 79 'Atmospheric Protection and Plant Service Areas Coatings.'"

2.15 **DELETE** Specification Section 09 91 23 "Interior Painting" from the Contract Documents in its entirety.

2.16 **DELETE** and **REPLACE** Specification Section 09 96 79 "Atmospheric Protection and Plant Areas Coatings" from **Attachment A** in this Addendum No. 3.

2.17 In Specification Section 22 07 19 "Plumbing Piping Insulation," **DELETE** Para. 3.8.A in its entirety and **REPLACE** with the following:

"A. Insulation with ASJ, Glass-Cloth, or Other Paintable Jacket Material: Paint jacket with paint system identified below and as specified in Section 09 96 79 'Atmospheric Protection and Plant Service Areas Coatings.'"

2.18 In Specification Section 23 07 19 "HVAC Piping Insulation," **DELETE** Para. 3.8.A in its entirety and **REPLACE** with the following:

"A. Insulation with ASJ, Glass-Cloth, or Other Paintable Jacket Material: Paint jacket with paint system identified below and as specified in Section 09 96 79 'Atmospheric Protection and Plant Service Areas Coatings.'"

2.19 In Specification Section 23 31 13 "Metal Ducts," **DELETE** Para. 3.7.A in its entirety and **REPLACE** with the following:

"A. Paint interior of metal ducts that are visible through registers and grilles and that do not have duct liner. Apply one coat of flat, black, latex paint over a

compatible galvanized-steel primer. Paint materials and application requirements are specified in Section 09 96 79 'Atmospheric Protection and Plant Service Areas Coatings.'"

2.20 **ADD** Specification Section 23 31 16 "Non-Metal Ducts" to the Contract Documents after Specification Section 23 31 13 "Metal Ducts" from **Attachment B** in this Addendum No. 3.

2.21 In Specification Section 26 05 33.13 "Conduits for Electrical Systems," **DELETE** Para. 2.8.B and **REPLACE** with the following:

"B. Material: Steel."

2.22 In Specification Section 40 05 06 "Couplings, Adapters, and Specials in Process Piping," **ADD** the following paragraphs after Para. 1.2.A.12:

"13. Flange adapter.
14. Dismantling joint."

2.23 In Specification Section 40 05 06 "Couplings, Adapters, and Specials in Process Piping," **ADD** the following paragraphs after Para. 2.14:

"2.15 Flange Adapter:

A. Manufacturers:

1. GE Oil & Gas (Dresser), Style 128-W.
2. Xylem (Smith-Blair), Type 913.
3. Romac Industries.

B. Description:

1. To connect a plain end pipe to a pipe flange.
2. Max. Pressure Rating: 150 psi.
3. Complies with AWWA.
4. Body & Flange: Ductile iron.
5. Follower: Ductile iron coupling with AISI C1012 or ASME SA36.
6. Wedge Gasket: Buna N.
7. Bolts & Nuts: High strength, low alloy steel.
8. Finish: Factory bonded epoxy coated.

2.16 Dismantling Joint:

A. Manufacturers:

1. GE Oil & Gas (Dresser), Style 131.
2. Xylem (Smith-Blair), Type. 975
3. Romac Industries, Model DJ400.

B. Description:

1. Double ended flanged adapter that allows for longitudinal adjustment between flanges and quick removal.
2. Max. Pressure Rating: 150 psi.
3. Complies with AWWA.
4. Body & Flange: Ductile iron A536 or A36 steel.
5. Follower: Ductile iron A536 or A36 steel coupling with AISI C1012.
6. Wedge Gasket: Buna N or S.
7. Bolts & Nuts: High strength, low alloy steel.
8. Tie-Rods: Required.
9. Finish: Factory bonded epoxy coated."

2.24 In Specification Section 40 05 07 "Hangers and Supports for Process Piping," **DELETE** Para. 3.2.G in its entirety and **REPLACE** with the following:

"G. Coatings:

1. Prime coat and top coat galvanized steel hangers and supports.

2. Conform to Section 09 96 79 'Atmospheric Protection and Plant Service Areas Coatings.'"

2.25 In Specification Section 40 05 93.23 "Low-Voltage Motor Requirements for Process Equipment," **DELETE** "on all motors rated 50 horsepower and larger" from Para. 2.2.I and **REPLACE** with "on all motors rated 50 horsepower and larger, except where specified in the process equipment specification."

2.26 In Specification Section 40 05 93.23 "Low-Voltage Motor Requirements for Process Equipment," **DELETE** Para. 2.3.F.4 in its entirety and **REPLACE** with the following:

"4. Shaft Current Mitigation: Provide shaft current mitigation with shaft grounding rings in accordance with Paragraph 2.4 of this specification."

2.27 In Specification Section 40 05 93.23 "Low-Voltage Motor Requirements for Process Equipment," **DELETE** Para. 2.3.G.4 in its entirety and **REPLACE** with the following:

"4. Shaft Current Mitigation: Provide shaft current mitigation with shaft grounding rings in accordance with Paragraph 2.4 of this specification."

2.28 In Specification Section 40 42 13 "Process Piping Insulation," **ADD** the following paragraph after Para. 2.2.A.4.b:

"c. Water Vapor Permeance: 0.02 perms max. in accordance with ASTM E96 Procedure A."

2.29 In Specification Section 40 42 13 "Process Piping Insulation," **ADD** the following paragraph after Para. 2.2.B.4.

"C. All insulation and related materials installed indoors to have a flame-spread index of 25 or less, and smoke-developed index of 50 or less.

D. All insulation and related materials shall not contain asbestos, lead, mercury, or mercury compounds.

E. Refer to the Process Piping Insulation Schedule in Paragraph 3.3 of this specification for insulation system requirements."

2.30 In Specification Section 40 42 13 "Process Piping Insulation," **DELETE** "2.3 PIPE INSULATION JACKETS" and **REPLACE** with the following:

"2.3 PROTECTIVE INSULATION JACKETS"

2.31 In Specification Section 40 42 13 "Process Piping Insulation," **DELETE** Para. 2.3.A in its entirety and **REPLACE** with "Not used."

2.32 In Specification Section 40 42 13 "Process Piping Insulation," **DELETE** Para. 3.2.C.1 in its entirety and **REPLACE** with the following:

"1. Insulate entire system, including pipe, fittings, valves, unions, flanges and strainers. Do not insulate flexible connections and expansion joints."

2.33 In Specification Section 40 42 13 "Process Piping Insulation," **DELETE** Para. 3.2.C.2 in its entirety and **REPLACE** with the following:

"2. Piping:

a. Furnish insulation with factory-applied vapor-barrier jacket.
b. Secure factory-applied jackets with pressure-sensitive adhesive with self-sealing longitudinal laps and butt strips.
c. Where protective jacketing is required, secure field-applied jacketing with outward-clinch expanding stainless steel staples (nominal 3/4-inch wide) or adhesives."

2.34 In Specification Section 40 42 13 "Process Piping Insulation," **DELETE** Para. 3.2.C.3.b in its entirety and **REPLACE** with the following:

"b. Where protective jacketing is required, secure insulated fitting covers to jacketing on adjacent pipes with outward-clinch expanding stainless steel staples (nominal 3/4-inch wide) or adhesives."

2.35 In Specification Section 40 42 13 "Process Piping Insulation," **ADD** the following paragraph after Para. 3.2.D:

"E. Piping Systems Conveying Hot Fluids:

1. Insulate entire system, including fittings, valves, unions, flanges and strainers. Do not insulate flexible connections and expansion joints.

2. Piping:

a. Furnish insulation with factory-applied vapor barrier jacket.
b. Secure factory-applied jackets with pressure-sensitive adhesive with self-sealing longitudinal laps and butt strips.
c. Where protective jacketing is required, secure field-applied jacketing with outward-clinch expanding stainless steel staples (nominal 3/4-inch wide) or adhesives.

2. Fittings, Joints, Unions and Valves:

a. Insulate with molded insulation of like material and thickness as adjacent pipe.
b. Where protective jacketing is required, secure insulated fitting and valve covers to jacketing on adjacent pipes with outward-clinch expanding stainless steel staples (nominal 3/4-inch wide) or adhesives."

2.36 In Specification Section 40 42 13 "Process Piping Insulation," **DELETE** Paragraphs 3.3.A.1 and 2, modified by Addendum No. 1 and **REPLACE** with the following:

"1. Effluent Water and Protected Water Piping:

a. Service: EWH, EWF, & PRW.

b. Type: P-1.

c. Thickness: 1-inch for all pipe sizes.

d. Protective Jacketing of Pipe & Fittings: PVC.

2. Hot Effluent Water Piping:

   a. Service: EWH(HOT).

   b. Type: P-1.

   c. Thickness: 1-inch for all pipe sizes.

   d. Limits: On piping located between floor level to 7-ft above floor level.

   e. Protective Jacketing of Pipe & Fittings: PVC."

2.37 In Specification Section 40 61 00 "Process Control and Enterprise Management Systems General Provisions," **REMOVE** Para. 1.5.E heading and **REPLACE** with the following:

"E. PLC Input/Output (I/O) List Submittal"

2.38 In Specification Section 40 61 00 "Process Control and Enterprise Management Systems General Provisions," **REMOVE** Para. 1.5.E.1 and **REPLACE** with the following:

"1. Submit a complete system Input/Output (I/O) address list for vendor equipment connected to a PLC under this Contract."

2.39 In Specification Section 40 61 00 "Process Control and Enterprise Management Systems General Provisions," **REMOVE** Para. 1.5.H.3 and **REPLACE** with the following:

"3. Complete system architecture drawing(s) showing in schematic form the interconnections between major hardware components including networking equipment, PLC systems and I/O modules, and local operator interfaces provided in equipment vendor panels with PLCs. The architecture drawing shall note connection to the following networks:"

2.40 In Specification Section 40 61 00 "Process Control and Enterprise Management Systems General Provisions," **REMOVE** Para. 1.5.H.4.f and **REPLACE** with the following:

"f. Not Used."

2.41 In Specification Section 40 61 00 "Process Control and Enterprise Management Systems General Provisions," **REMOVE** Para. 1.5.H.5 and **REPLACE** with the following:

"5. Not Used."

2.42 In Specification Section 40 61 26 "Process Control System Training," **ADD** the following paragraphs after 1.2.B.1:

"2. Section 46 24 23 'Inline Grinders'

3. Section 46 71 17 'Enclosed Gravity Belt Thickeners'"

2.43 In Specification Section 40 61 93 "Process Control System Input/Output List," **ADD** the following paragraph after 1.2.B.2:

"3. Section 46 24 23 'Inline Grinders'"

2.44 In Specification Section 40 61 93 "Process Control System Input-Output List," **REMOVE** Para. 1.3.C heading and **REPLACE** with the following:

"C. DCS Input/Output Schedule Color:"

2.45 In Specification Section 40 62 63 "Operator Interface Terminals," **ADD** the following paragraph after 1.2.B.3:

"4. Section 46 71 17 'Enclosed Gravity Belt Thickeners'"

2.46 In Specification Section 40 63 43 "Programmable Logic Controllers," **ADD** the following paragraphs after 1.2.B.2:

"3. Section 46 24 23 'Inline Grinders'

4. Section 46 71 17 'Enclosed Gravity Belt Thickeners'"

2.47 In Specification Section 40 66 13 "Switches and Routers," **ADD** the following paragraph after 1.2.B.3:

"4. Section 46 71 17 'Enclosed Gravity Belt Thickeners'"

2.48 In Specification Section 40 67 17 "Industrial Enclosures," **ADD** the following paragraphs after 1.2.B.3:

"4. Section 46 24 23 'Inline Grinders'

5. Section 46 71 17 'Enclosed Gravity Belt Thickeners'"

2.49 In Specification Section 40 67 33 "Panel Wiring," **ADD** the following paragraphs after 1.2.B.9:

"10. Section 46 24 23 'Inline Grinders'

11. Section 46 71 17 'Enclosed Gravity Belt Thickeners'"

2.50 In Specification Section 40 71 43 "Variable Area Flow Meters," **DELETE** Para. 2.1.B.5. and **REPLACE** with the following:

"5. Maximum Operating Temperature: 130 degrees F."

2.51 In Specification Section 43 23 37 "Screw Impeller Pumps," **DELETE** Para. 2.2.B.16 and **REPLACE** with the following:

"16. Motor Rated Power: 30 hp."

2.52 In Specification Section 43 23 37 "Screw Impeller Pumps," **DELETE** Para. 2.3.C.1 and **REPLACE** with the following:

"1. Material: High-chrome cast iron, ASTM A 532/532M, Class III, Type A1, with minimum hardness 450 Brinell, or duplex stainless steel, with minimum hardness 260 Brinell."

2.53 In Specification Section 43 23 37 "Screw Impeller Pumps," **DELETE** Para. 2.3.D.4. and **REPLACE** with the following:

"4. Material: High-chrome cast iron, ASTM A 532/532M, Class III, Type A1, with minimum hardness 450 Brinell, or duplex stainless steel, with minimum hardness 260 Brinell."

2.54 In Specification Section 46 24 23 "Inline Grinders," **ADD** the following paragraphs after Para. 1.2.B.8:

"9. Section 40 61 00 'Process Control and Enterprise Management System General Provisions'

10. Section 40 61 26 'Process Control System Training'

11. Section 40 61 93 'Process Control System Input-Output List'

12. Section 40 63 43 'Programmable Logic Controller'

13. Section 40 67 17 'Industrial Enclosures'

14. Section 40 67 33 'Panel Wiring'"

2.55 In Specification Section 46 41 24 "Vertical Shaft Mixers," **DELETE** the second sentence of Para. 2.5.C in its entirety and **REPLACE** with the following:

"Suitable for AGMA Class III 24-hour continuous service under moderate shock

conditions with Service Factor of 2.0."

2.56 In Specification Section 46 41 24 "Vertical Shaft Mixers," **DELETE** Para. 2.5.C.10.a in its entirety and **REPLACE** with the following:

"a. Material: Alloy steel precision generated and hardened. Minimum AGMA 2009-B01 quality number 10 or greater for helical gearing."

2.57 In Specification Section 46 41 24 "Vertical Shaft Mixers," **DELETE** Para. 2.5.C.10.b in its entirety and **REPLACE** with the following:

"b. Gears to be only helical gearing to ensure highest efficiency coupled with convenience of mounting, maintenance and installation. Spiral bevel gears are not acceptable."

2.58 In Specification Section 46 41 24 "Vertical Shaft Mixers," **DELETE** Para. 2.7.D.5 in its entirety.

2.59 In Specification Section 46 41 24 "Vertical Shaft Mixers," Para. 2.7.E.4, **DELETE** the following sentence:

"Impart the water horsepower specified in the Design Requirements at maximum speed."

2.60 In Specification Section 46 71 17 "Enclosed Gravity Belt Thickener," **ADD** the following paragraphs after 1.2.B.14:

"15. Section 40 61 00 'Process Control and Enterprise Management System General Provisions'

16. Section 40 61 26 'Process Control System Training'

17. Section 40 61 93 'Process Control System Input-Output List'

18. Section 40 62 63 'Operator Interface Terminal'

19. Section 40 63 43 'Programmable Logic Controller'

20. Section 40 66 13 'Switches and Routers'

21. Section 40 67 17 'Industrial Enclosures'

22. Section 40 67 33 'Panel Wiring'"

3. CHANGES TO THE DRAWINGS

3.1 **DELETE** and **REPLACE** Sheet 400-S-102 from Attachment C.

3.2 On Sheet 400-S-103, **UPDATE** per the modifications shown below:

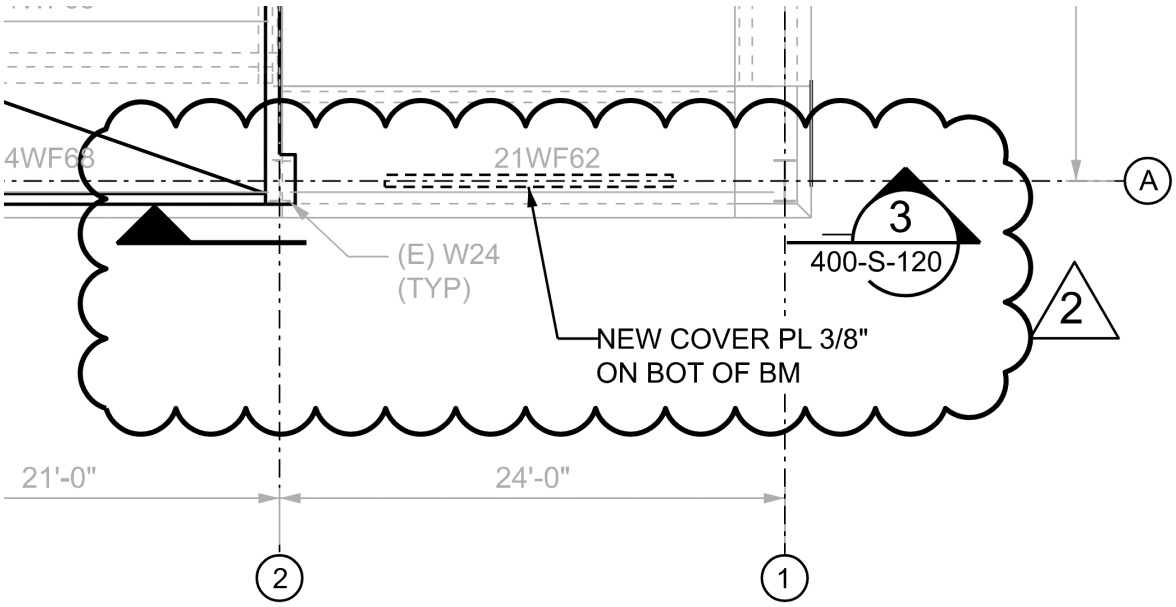

3.3 On Sheet 400-S-107, **UPDATE** per the modifications shown below:

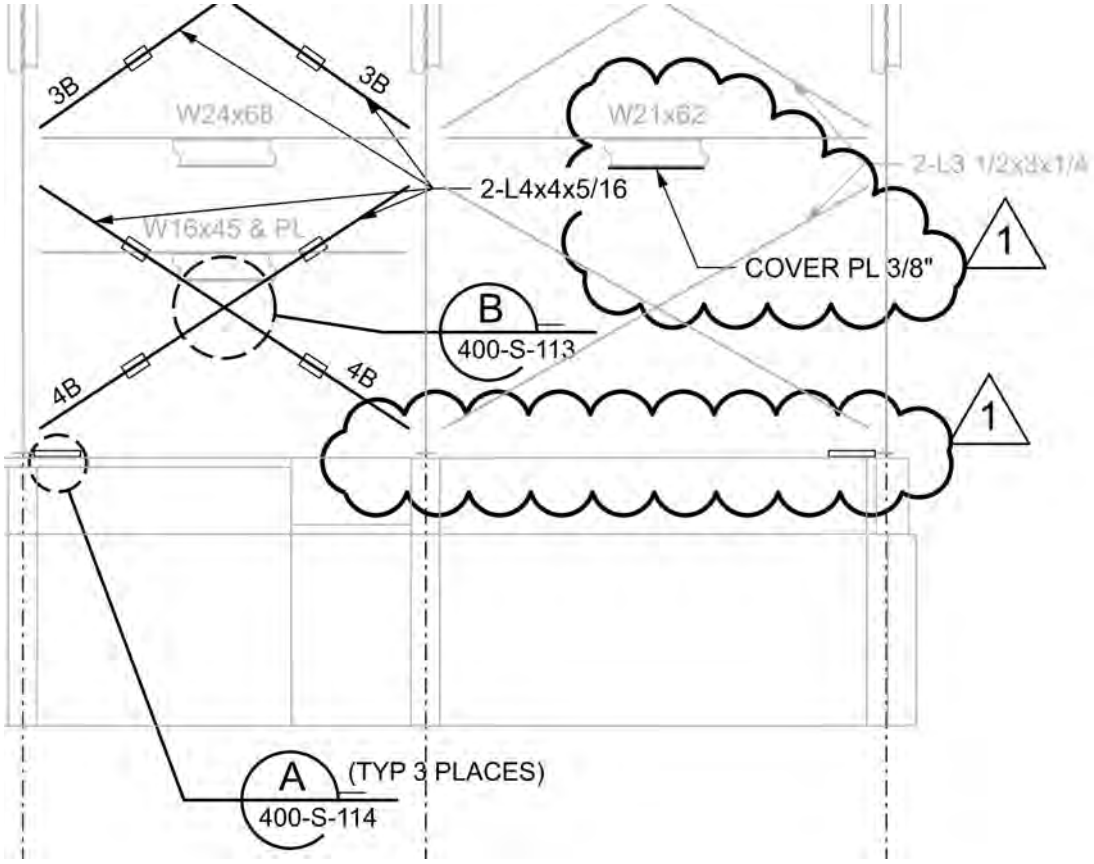

3.4 **DELETE** and **REPLACE** Sheet 400-S-109 from Attachment C.

3.5 **DELETE** and **REPLACE** Sheet 400-S-114 from Attachment C.

3.6 **DELETE** and **REPLACE** Sheet 400-S-120 from Attachment C.

3.7 On Sheet 400-S-123, **UPDATE** per the modifications shown below:

THICKENING FEED TANKS
SCHEDULE OF ESTIMATED CONCRETE REPAIRS

BID ITEM	DETAIL/DWG	# OF LOCATIONS	TOTAL QUANTITY	UNITS	COMMENTS	REFERENCE SPECIFICATION 1
1	A,B,D/400-S-122	6	20	SQ FT	ASSUME 2" DEEP	03 01 00.61
2	A,B,D/400-S-122	28	55	SQ FT	ASSUME 1 1/2" DEEP	03 01 00.61
3	A,B,D/400-S-122	20	40	SQ FT	ASSUME 1 1/2" DEEP	03 01 00.61
4	C/400-S-122	8	50	FT	ASSUME #6 BAR	03 01 00.61
5	E/400-S-122	4	40	FT	ASSUME 15" DEEP	03 01 00.61
6	F/400-S-123	2	25	FT	ASSUME 15" DEEP	03 01 00.61
7	G/400-S-123	6	75	FT	-	03 01 00.61
8	H/400-S123	2	4000	SQ FT	-	09 96 76.33

3.8 On Sheet 000-M-001, **ADD** the following Note 37 after Note 36:

"37. NOT ALL SMALL PIPING IS SHOWN ON THE MECHANICAL DRAWINGS. CONTRACTOR SHALL REFER TO PROCESS FLOW DIAGRAMS AND PROCESS AND INSTRUMENTATION DIAGRAMS FOR ALL REQUIRED PIPING, VALVES, INSTRUMENTS, AND ACCESSORIES TO COMPLETE THE INSTALLATION IN EACH PROCESS AREA."

3.9 On Sheet 000-M-005, **ADD** the following Note 4 after Note 3:

"4. NOT ALL SMALL PIPING IS SHOWN ON THE MECHANICAL DRAWINGS. CONTRACTOR SHALL REFER TO PROCESS FLOW DIAGRAMS AND PROCESS AND INSTRUMENTATION DIAGRAMS FOR ALL REQUIRED PIPING, VALVES, INSTRUMENTS, AND ACCESSORIES TO COMPLETE THE INSTALLATION IN EACH PROCESS AREA."

3.10 On Sheet 400-MDM-122, **DELETE** the callout "PNEUMATICALLY OPERATED KGV (TYP)" and **REPLACE** with "REMOVE PNEUMATICALLY OPERATED KGV AND ASSOCIATED AIR PIPING (TYP)."

3.11 **DELETE** and **REPLACE** Sheet 400-M-124 from Attachment C.

3.12 On Sheet 400-M-131, **ADD** the following Note 3 after Note 2:

"3. EXISTING BRIDGE CRANE, WHICH SERVICES THE MEZZANINE AREA AND HAS A RATED CAPACITY OF 25 TONS, CAN BE UTILIZED BY THE CONTRACTOR FOR THE PURPOSES OF DEMOLITION AND INSTALLATION, WITH THE FOLLOWING CONDITIONS:

A. OWNER REGULARLY HAS BRIDGE CRANE INSPECTED AND CERTIFIED BY A THIRD PARTY. BRIDGE CRANE WILL BE INSPECTED PRIOR TO COMMENCEMENT OF DEMOLITION.

B. UPON COMPLETION OF ALL REQUIRED ACTIVITIES INVOLVING THE BRIDGE CRANE, CONTRACTOR IS RESPONSIBLE FOR OBTAINING INSPECTION AND CERTIFICATION REPORT FROM THIRD PARTY APPROVED BY THE OWNER. REPORT SHALL SUMMARIZE DEVIATIONS BETWEEN THE INITIAL INSPECTION AND FINAL INSPECTION.

C. ANY DEVIATIONS NOTED BETWEEN THE INITIAL INSPECTION AND FINAL INSPECTION OF THE BRIDGE CRANE ARE THE RESPONSIBILITY OF THE CONTRACTOR. CONTRACTOR TO MAKE REPAIRS, AS NEEDED, AT THEIR OWN EXPENSE.

D. NOTE THAT THE BRIDGE CRANE WILL NOT REACH THE BASEMENT LEVEL OF THE DEWATERING BUILDING. CONTRACTOR MAY USE THE BASEMENT ACCESS HATCH BUT WILL NEED TO MAKE ACCOMMODATIONS FOR ANY POTENTIAL EQUIPMENT HANDLING THROUGH THE HATCH. NOTE THE ELEVATOR CAN BE USED AS A MEANS OF ACCESS TO THE BASEMENT LEVEL."

3.13 On Sheet 400-H-100, **ADD** the following sentence to the end of Key Note 91:

"8" FOUL AIR DUCTWORK TO BE CPVC AND HAVE THE SAME SCHEDULE

AS THE EXISTING DUCTWORK BEING CONNECTED TO."

3.14 **DELETE** and **REPLACE** Sheet 400-P-102 from Attachment C.

3.15 On Sheet 400-P-103, **UPDATE** per the modifications shown below:

78 ROUTE THE 3/4" HOT WATER LINE FROM THE WATER HEATER TO THE UTILITY SINK. WATER HEATER SHALL HAVE A DISCHARGE TEMPERATURE OF 140 F TO THE THERMOSTATIC MIXING VALVE. CONTRACTOR SHALL HAVE AN ASSE 1070 COMPLIANT THERMOSTATIC MIXING VALVE AT THE UTILITY SINK WHICH SHALL SUPPLY 105 F WATER AT THE SINK TO PREVENT SCALDING.

124 LOCATE UTILITY SINK AND ASSOCIATED WATER HEATER AND PIPING AS CLOSE TO THE EDGE OF THE MEZZANINE AS POSSIBLE TO ALLOW FOR SUFFICIENT PERSONNEL PATHWAY CLEARANCE.

1

3.16 On Sheet 400-P-103, **UPDATE** per the modifications shown below:

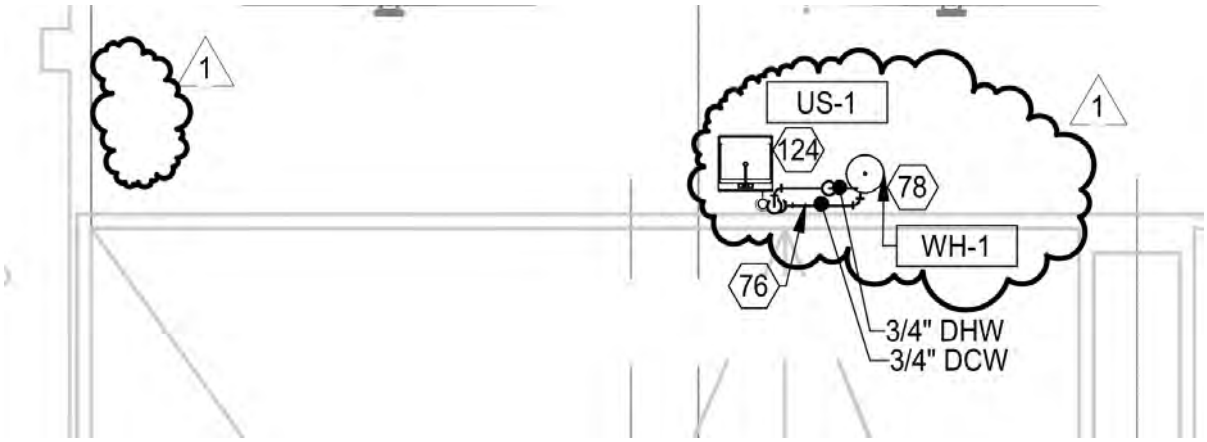

3.17 On Sheet 400-P-104, **UPDATE** per the modifications shown below:

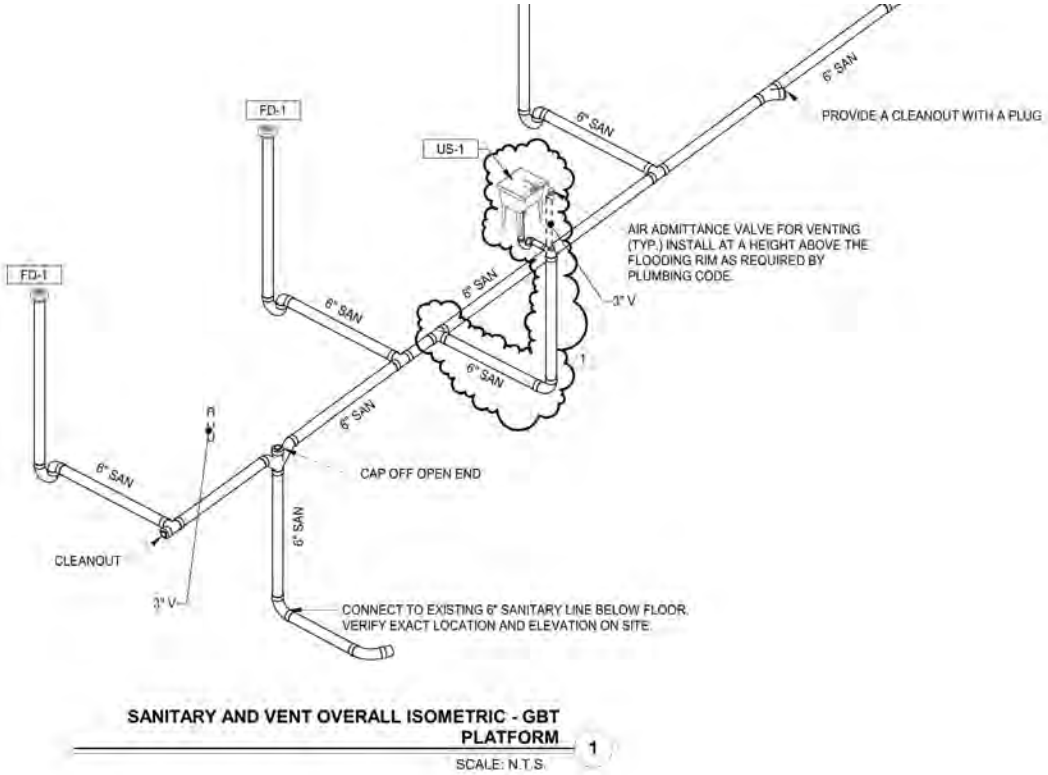

3.18 **DELETE** and **REPLACE** Sheet 701-ET-001 from Attachment C.

3.19 **DELETE** and **REPLACE** Sheet 702-ET-001 from Attachment C.

3.20 **DELETE** and **REPLACE** Sheet 711-ET-001 from Attachment C.

3.21 **DELETE** and **REPLACE** Sheet 712-ET-001 from Attachment C.

3.22 **DELETE** and **REPLACE** Sheet 821-ET-001 from Attachment C.

3.23 **DELETE** and **REPLACE** Sheet 821-ET-002 from Attachment C.

3.24 **DELETE** and **REPLACE** Sheet 831-ET-001 from Attachment C.

3.25 **DELETE** and **REPLACE** Sheet 831-ET-002 from Attachment C.

3.26 **DELETE** and **REPLACE** Sheet 701-ED-001 from Attachment C.

3.27 **DELETE** and **REPLACE** Sheet 706-ED-001 from Attachment C.

3.28 **DELETE** and **REPLACE** Sheet 716-ED-001 from Attachment C.

3.29 **DELETE** and **REPLACE** Sheet 824-ED-001 from Attachment C.

3.30 On Sheet 400-ET-121, **UPDATE** the location of WH-1 and US-1 to match the revised location shown on Sheet 400-P-103 in this Addendum No. 3.

4. QUESTIONS AND ANSWERS

Note: Some of the following questions contain multiple requests. Answers are provided to multiple requests in the same order as the questions.

Q1: Specification 40 61 00
The Specification is written that the PCSS has control of creating the I/O list, assigning points at his discretion, etc… Also, the PCSS runs the Startup and Testing.
On previous projects, ALCOSAN programs the DPUs, and as such takes control of which I/O points to use for each input/output.
Typically ALCOSAN provides the I/O list with required termination points at the DPU.
The System Integrator (PCSS) researches the termination of the Field Devices and creates Loop Drawings for the Electrical Contractor to utilize in terminating their wiring.
ALCOSAN runs the Startup Testing, because they are running the equipment via the DPU, which they programmed and control. The PCSS only serves for troubleshooting of the Electrical work and assisting in triggering the field devices.
When quoting this project, should the PCSS assume the specification is correct and they will have complete control/responsibility of the I./O list and Startup Testing, OR the 2nd description I have listed?

A1: The Contractor will be responsible for the coordination and execution of all testing, startup, and commissioning. The Owner will perform the application programming and DCS portion of the site acceptance testing. Note that the I/O lists for the DPUs have been provided via Addendum No. 1. During the startup process when process flow is required for any phase of testing or runtime, ALCOSAN's operators will run the equipment. Plant flow and processes will have to be maintained throughout the startup period.

Q2: Addendum #1 "Questions and Answers" states the General Contractor hires the PCSS (Spec 40 61 00).
Spec 01 11 00, paragraph 1.2, A, 2, a, 15 states the Electrical Contractors provides the system testing and startup.
Does the PCSS or the Electrical Contractor write the startup test plan AND

implement it?

A2: As clarified in Addendum No. 2, the work of the PCSS shall be provided under Contract 1799E. The reference to Specification 01 11 00 is for the startup of electrical equipment, and the Electrical Contractor is responsible for startup services, including the startup and commissioning plan. Note that the Construction Manager will coordinate the development of the testing and start-up schedule with the prime Contractors in accordance with Section 01 75 00 "Facility Start-up."

Q3: Spec 40 61 00 (Description of the PCSS) paragraph 1.8, A lists the spare parts provided by the PCSS. It lists PLCs and PLC components "for each type provided". The PCSS is NOT providing any PLCs on this project.
Spec 40 61 26, paragraph 3.2 lists PLC Training, paragraph 3.3 lists PLC Hardware and Software Training in substantial detail.
Spec 40 63 43, paragraph 2.4, B, 5 refers to purchasing Software Licenses.
Please clarify what spare parts, software, and training the PCSS should or should not provide, considering they are NOT providing any PLC's or HMI's?

A3: The list of spare parts is to cover the entire project. With certain items listed they are provided as part of a vendor package with the associated spare parts to be provided by said vendor. The PCSS would be responsible to provide spare parts based upon the items that are being supplied in their contract scope and not items that are in the scope of other contractors on the project. The PCSS is responsible for training in accordance with Section 40 61 26, as modified in Addendum No. 1.

Q4: The 1799G Scope includes Unit Price Work for unknown quantities of repair work on tanks that have not be inspected. How will the Contract Time be adjusted to actual repair quantities? How will the maximum shutdown durations described in Specification 015200 be adjusted to actual repair quantities. How will the 1799E, P, and H Contract Time be adjusted to actual repair quantities?

A4: Contract time will not be adjusted to actual repair quantities. Maximum shutdown durations in Section 01 52 00 will not be adjusted unless Unit Price quantities are exceeded. The Contract Time for 1799E, P, and H will not be adjusted.

Q5: Please provide clarification for how the unit price's are to be calculated on Bid Form 1799G. Example: Unit Price Item 1: Does this item reflect 6 locations, with a quantity of 3.33SF per location for a total of 20SF? Where-as the Extended Total Amount is calculated by taking the 20SF and multiplying it to the Unit Price?

A5: The unit prices should be calculated as the Total Quantities column multiplied by the Unit Price column. Example: Unit Price Item 1: Qty 20 x $___ / SF = Extended Total Amount.

Q6: Specification 01110, section 1.4 states that various tanks will be drained to "Owner standards". Please provide or clarify the Owner standards.

A6: Owner will drain tanks by gravity, and there may be sludge, grit, or sewage left in the tanks depending on the drain layout. Contractor shall be responsible for any additional cleaning or hosing of the tank to the necessary requirements to perform their scope of work. Any solids removed can be disposed of at the plant (typically in the ash pits that are located along the river near the Main Pump Station). Any liquids or washwater that needs to be removed can utilize the plant drainage system. Contractor shall notify the CM prior to dumping any solids.

Q7: Specification 01100, section 1.5 states that Substantial Completion is required before the Owner occupies/uses each area with Contractor access granted for punch list items and warranty work. Specification 015200 describes in several places phased installations where equipment is put into use, tested for 5 days, then put in use before the replacement of the next piece of equipment can begin. Please clarify this discrepancy and/or confirm that the Owner will take care, custody, and control of each installed piece of equipment after the associated 5-day test? What paperwork will be required before the Owner takes care, custody, and control?

A7: Owner will take occupancy of equipment following Partial Substantial Completion or Substantial Completion. The Certification of Substantial Completion is defined in Article 3, Paragraph 52.

Q8: Specification 015200, section 1.2-J states that existing screw conveyors will need to be temporarily wired to the new centrifuge control panels. Is this and other temporary power and control wiring in the Electrical Prime scope?

A8: Temporary utilities are described in Section 01 50 00 “Construction Facilities and Temporary Controls and Utilities.” The Electrical Contractor is responsible for temporary wiring of the screw conveyors.

Q9: Specification 011100, section 1.2-A-1 paragraphs N, O, P, Q state that instrumentation installation is in the General Prime scope. Section 2-a states that all wire terminations are in the Electrical Prime scope. Sections 2-d,e,l, and m state that cables in conduit from field instruments are in the Electrical Prime scope. Please clarify.

A9: Refer to revisions to Section 01 11 00 “Summary of Work” in Addendum No. 2.

Q10: Please clarify the UAV (drone) photography requirements in Specification 013000 considering that this work is indoors.

A10: See Changes to the Technical Specifications in this Addendum No. 3.

Q11: In reference to plan sheet 725-M-001, the drawing shows that there are 3 – 6” check valves & 3 – plug valves in the DIP.GL-06”-CST-GRV lines [DIP is to

be glass lined per Above-grade DIP Schedule in SPEC 400519 1.9.A]. Valve SPECs 400562, 400565.23 & 400565.33 do not call out glass lined valves or grooved ends. Please confirm these 6 valves in the DIP.GL-06”-CST-GRV lines don’t require glass lining, and that they are flanged valves by addendum.

A11: Check valves for the scum piping do not require glass lining and should be flanged in accordance with Section 40 05 65.23.

Q12: In reference to plan sheet 400-M-101, the note at Existing Air Compressor #2, indicates installing new 1” INA between Air Compressor #2 and existing [INA] pipe, so is there already INA pipe in the area near the new grinder valve control panels are to be mounted per DWG 400-M-124? How much new 1” INA is required between any existing 1” INA that may be in the Thickening Feed Tank Mixer Room – Lower Level Plan, near these 2 new grinder valve control panels? Are individual air tubing runs required to each pneumatically controlled valve from the grinder valve control panels, or can several valves be tied into a single tubing header run to the general valve area[s]? Please provide the additional information by addendum.

A12: See Changes to the Drawings in this Addendum No. 3. It is acceptable to run several valves together in a single tubing header as shown in the P&IDs.

Q13: Please provide a comprehensive AWWA valve schedule with information such as body material, valve end connection [flanged], operator type, limit switch required, etc. by addendum.

A13: A valve schedule is not included as part of the Contract Documents.

Q14: In reference to Spec 096900 paragraph 2.2.D. Describes conductive vinyl tile which is a non standard finish with most, if not all raised floor manufacturers. Additionally, being non-standard this finish will be more expensive than the standard high pressure laminated surfaces that have the same electrical resistance values as described in this paragraph. Is it acceptable to bid the access floor panels with a factory applied high pressure laminated surface? Please clarify by addendum.

A14: Tate and ASM guide specifications identify two types of ESD floor finishes: Static Dissipative (1,000,000 OHMS) or Conductive (25,000 OHMS). Neither manufacturer identified high pressure laminate as an optional floor finish. If a high pressure laminate floor finish is used, we do not know that product’s OHM-rating. The project specification identifies Conductive ESD as the BOD.

Q15: In reference to Addendum #1 updated the Process Piping Insulation Spec 40 42 13 3.3 SCHEDULE. EWH, EFW & PRW lines now require P-1 insulation with white factory applied, reinforced foil kraft vapor barrier [no PVC Jacket], while EWH(HOT) lines now require P-2 insulation that has no vapor barrier [just plain fiberglass insulation] from floor level to 7’ above finished floor [no

PVC jacket]. Is this P-2 designation correct? Please clarify by addendum.

A15: See Changes to the Technical Specifications in this Addendum No. 3.

Q16: In reference to spec section 01 50 00, please clarify the need for an elevator permit in section 1.6, A, 4 by addendum.

A16: This project does not include any scope related to elevators, so no permit would be required.

Q17: In reference to spec section 01 50 00, 1.14, B notes a trailer for the CM is to be provided under section 01 50 13. Please clarify requirement and location for the office. Please clarify which contract(s) are to connect the utilities to the field office.

A17: See Changes to the Technical Specifications in this Addendum No. 3.

Q18: In reference to plan sheet 000-G-006, there is no laydown area granted to contract 1799. Some area will be needed for material and tool storage. Also, break areas are required for the work force. Would the area between building 403 and 411 be able to be used? Please clarify by addendum.

A18: Laydown areas are shown in hatched green on Sheet 000-G-006. These areas are available for Contract 1799 use.

Q19: Please provide O&M's for the existing centrifuges to allow for safe demolition.

A19: The O&M manuals for the existing centrifuges will be provided to the successful bidder after award. The total weight of each centrifuge is 33,000 pounds and the weight of the heaviest single part for maintenance is 7,000 pounds.

Q20: It appears that the contractor must use ALCOSAN's overhead bridge cranes for construction activities. Please provide requirements to do so.

A20: See Changes to the Drawings in this Addendum No. 3.

Q21: In reference to the Boiler and Machinery Insurance requirements, please consider removing this requirement as it is not applicable to the scope of work for this project by addendum.

A21: This requirement will not be removed.

Q22: Structural Framing Finish: The specs give multiple conditions for finish of framing members in various conditions in both 09 96 79 and 05 12 00 specs. Please identify intended finish for framing steel in both mezzanine and control room areas as well as elevation angle bracing

A22: Refer to Specification Section 09 96 79 3.6 Plant Service Areas Coating Schedule for intended finishes of framing members. Spec provides finish options for Steel, Ductile Iron, and Galvanized Metal substrates.

Q23: Mezzanine Slab Form Vs Deck: Drawings (S110 in particular) do NOT show any form of deck underneath the new mezzanine? Is the intent here that its formed and then forms are stripped after? If not please identify deck to be used for this application or what other means methods are intended.

A23: The concrete slabs at the GBT mezzanine are to use formwork that gets stripped similar to how the existing Centrifuge floor are constructed. Note that the bottom of the concrete deck is to be flush with the bottom of the top flange of the steel beams. The floor of the Control Room uses metal stay-in-place form deck.

Q24: Bracing phasing: we assume the vertical plane angle bracing (shown on S107-109 @ lines A,D,1,12) are only designed for the final construction arrangement. Will Alcosan be providing support such as phasing and if necessary shoring plan for intermediate phases of completion? Failing that we will need better documentation of loads and intent of this design.

A24: The new vertical bracing is required for the current code driven lateral loads on the building. This bracing is designed for future lateral loads. The bracing can be installed in sequences which allow for coordinated installations with other construction scope and activities.

Q25: Section 46 41 24 – Vertical Shaft Mixers – 2.5.C.9.a: Units will come with a dipstick as requested, however they may also contain a sight glass – will this be acceptable, or does the sight glass need to be replaced with something else so it is not present at all?

A25: Sight glasses are not acceptable as specified.

Q26: Section 46 41 24 – 2.5.C.10.a: Please change this so that it reads "Minimum AGMA quality number 10 or greater for helical gearing." The spiral bevel gearing will be AGMA Q9.

A26: See Changes to the Technical Specifications in this Addendum No. 3.

Q27: Section 46 41 24 – 2.7.D.5: Please remove this requirement – the shaft stress is already limited to 8,000 psi in 2.7.D.1.

A27: See Changes to the Technical Specifications in this Addendum No. 3.

Q28: Section 46 41 24 – 2.7.E.4: Please remove the 2nd sentence in this, as there is now water horsepower specified in the design requirements section. Mixers typically impart up to 90% of the motor nameplate as water HP, although there is no minimum requirement typically.

A28: See Changes to the Technical Specifications in this Addendum No. 3.

Q29: Section 46 41 24 – 2.8.F: Please remove this requirement – standard practice for baffles that are split into smaller pieces is just to have them be located close to each other length-wise, there is no significant process benefit to bolt the two baffle lengths together.

A29: Baffles sections to be bolted together to eliminate ragging on exposed edges. No changes made to these specifications.

Q30: SUMMARY OF WORK 01 11 00 – 4 1799-G
q. Installation of new field mounted gas monitoring devices and the associated horns and lights.
Will the 1799-E Contractor be responsible for the wiring and conduit between the horns and strobes to the Gas Master Panels?

A30: Yes, electrical conduit and wiring shall be provided under Contract 1799E as indicated in Addendum No. 2.

Q31: Drawings 000-I-003 and 000-I-004, 000-1-006, 000-I-007, 000-I-008 DCS System Arch
Will ALCOSAN be responsible for the required interior modifications required for DPU032-P2EH, DPU032P1EH DPU032-P1AD, DPU032-P1EH, DPU032-P2AD, DPU037-P1AD, DPU037-P2AD, DPU038-P1AD and DPU-038-P2AD.

A31: ALCOSAN will furnish all new I/O cards and managed network switches for the DCS cabinets and install them in the DCS cabinets along with the power wiring for the network switches.

Q32: TEMPORARY POWER AND LIGHT
Is the 1799-E Contractor responsible for temporary power and light for the G and P Contracts. If so please define the limits of the E Contracts responsibility including power to temporary field offices and work site power and light for the G and P Contracts.

A32: The Electrical Contractor is responsible for wiring field offices and general site power for construction purposes. General site power includes any temporary lighting required and power for plug in tools at the work areas for use by all contractors. Reference specification section 01 50 00.

Q33: Drawing 000-ID-003 and 000-ID-004
If these panels are being provided as a SKID complete package from a specific vendor or ALCOSAN, please disregard question. If these panels are being provided by the Electrical Contractor, OR the General Contractor via the PCSS, please provide a specification or part number for the "Flow Controller" shown on these drawings.

A33: The panels shown are provided by the PCSS. The flow controller is specified in 40 78 13 2.1 – Single Loop Controllers.

Q34: The scope of the work covered by Specification 014525 - Testing Concrete Structures for Watertightness is not clear. It seems likely that only the Thickening Feed Tank is to be tested, but the Specification reads "Perform a water tightness test as required by Engineer on any additional structure when in the opinion of the Engineer the structure contains sufficient concrete

defects that could impair the water tightness of the structure". In the case of the Thickening Feed Tanks, the Engineer will decide which cracks to fix and how, but bidders are to guarantee the resulting tank will be watertight as part of our lump sum proposal? An allowance may be a better commercial mechanism for this work.

A34: See Changes to the Technical Specifications in this Addendum No. 3. This work is covered under allowances (unit price work) for concrete repair pay items.

Q35: Specification 015200, section 1.8-A-2 states that the shutdown of the Thickening Feed Tanks is limited to 4 months. Is this 4 months each (8 months total) or 4 months total?

A35: The Work Area 400.3 includes the replacement of both mixers and the maximum duration for both remains at 4 months as written.

Q36: Specification 41015.18, section 1.2-B states that Owner will clean the Thickening Feed Tanks enough "for personnel entry into the tanks". Can this be better defined? For example, a haz-mat trained diver in a wet suit/supplied air helmet and a typical laborer in rubber boots/safety glasses could both be considered "personnel".

A36: A diver is not anticipated for tank entry. The area will be considered a confined space, and personnel will require appropriate personal protection equipment for entry into the tanks. Reference Q6 on how draining to Owner's standards is defined.

Q37: Specification 015200, section 1.9 details work to be performed before the new WAS Thickening Mezzanine is installed. Is there a sequence that needs to be described to detail which supplemental steel or modification of existing steel work needs to be preformed before the new Mezzanine, new centrifuges, etc. loads are added to the building?

A37: See Changes to the Contract Specifications in this Addendum No. 3.

Q38: SUMMARY OF WORK 01 11 00 – 8 1799-E
j. Liquid Polymer Mixing Unit PMX011-400 & PMX012-400
1)Provide new control panel (PMX011-400CP and PMX012-400CP) at new liquid polymer mixing unit skids PMX011-400 and PMX012-400.
Drawing 400-EM-008 details that the PMX011-400 and PMX012-400 are PMX
Vendor Panels which we would assume are provided with the skid. Is it the 1799-E Contractors responsibility to purchase these panels from the PMX Vendor?

A38: The vendor panels will be provided with the skid, to be purchased by the under the 1799G Contract. The 1799E Contractor does not need to purchase these panels from the PMX Vendor. See Changes to the Contract

Specifications in this Addendum No. 3.

Q39: Drawing 701-ET-001 – Electrical Power Plan – Conduit and Cable ID No. P-060610, P-060620, P-060630 and P-060640 are all scheduled to be 1-1/2" Conduit from the PS Pump to the Existing PJB004-701 Junction Box.
Addendum No. 1 - Drawing 701-ED-001 – Electrical Riser Diagram – Detail A Conduit and Cable ID No. P-060610 these same conduits are scheduled to be 1" Conduit. This detail is typical for (4) Pumps.
Confirm which is correct.

A39: See Changes to the Drawings in this Addendum No. 3.

Q40: Addendum No. 1 – Drawing 701-ED-001 – Electrical Riser Diagram – Detail A – We have the following issues:
P-060612 – this does not show on the cable schedule
P-060612 –
Detail A shows a ¾" Conduit while there is a 2 in the remarks for the cable schedule. We assume the remarks indicate the conduit sizes.
Detail A shows this conduit going from PJB001-700 to FSL then P-060614 to the Solenoid while the cable schedule shows this conduit going to PT04-480VAC. (Note P-060614 does not show on the cable schedule).

A40: See Changes to the Drawings in this Addendum No. 3.

Q41: Referencing Unit Prices, Item #8, Chemical Resistant Coating – Detail H, (on drawing 400-S-123). What product is the Chemical Resistant Coating? I don't see it mentioned in the Specification 03 01 00.61?

A41: Refer to Changes to the Drawings in this Addendum No. 3.

Q42: There are 2-24" dismantling joints shown on Dwg 189. I ca not find a spec for these fittings. I looked in Sec. 40 05 06 but I couldn't find a reference.

A42: See Changes to the Technical Specifications in this Addendum No. 3.

Q43: For the Thickening Feed Tanks, can the wash water and cleaning residual be handled onsite? Or will it have to be hauled out?

A43: Yes, any solids removed can be disposed of at the plant (typically in the ash pits that are located along the river near the Main Pump Station). Any liquids or washwater that needs to be removed can utilize the plant drainage system. Contractor shall notify the CM prior to dumping any solids.

Q44: Please provide a schedule on the drawings for equipment and knife gate valves including all sizes, method of installation, and weights.

A44: A valve schedule is not included as part of the Contract Documents.

Q45: Addendum No. 2 Page 5 of 21
2.2 In Specification Section 01 11 00 "Summary of Work". ADD the following

Paragraphs after Para 1.2.A.1.r
s. Installation of field-mounted instruments and flow measurement devices and non-equipment manufacturer-supplied instrumentation furnished by the PCSS under Contract 1799-E.
t. Installation of all seal water assemblies and stations, including piping, valves, instrumentation and steel support racks. Instrumentation shall be furnished PCSS under Contract 1799-E.
Questions: Please verify the following
The 1799-G Contract will be responsible for the installation of all instrumentation provided by the 1799-E Contract.
The 1799-G Contract will be responsible to provide and install all instrument mounting requirements as detailed in Drawings 000-ID-001 Sheet 383 of 440 and 000-ID-002 Sheet 384 of 440.
The 1799-G Contract will be responsible to provide and install all required annular seals, venturi's for flowmeters, tank flanges for level detection, diaphragm seals and all associated piping for gauges and variable area flowmeters.

A45: Confirmed.
Confirmed.
Annular seals, flowmeters, and diaphragm seals shall be furnished under Contract 1799E and installed under Contract 1799G. Tank flanges are the responsibility of the respective tank suppliers and provided under Contract 1799G. Piping for gauges and flowmeters shall be provided under Contract 1799G.

Q46: Addendum No.2 Page 6 of 21
2.3 In Specification Section 01 11 00 "Summary of Work". ADD the following
Paragraphs after Para. 1.2.A.2.a 18):
19) The work of the Process Control System Supplier (PCSS) System Integrator shall be provided under Contract 1799-E. PCSS shall provide services as per Specification Section 40 61 00 through 40 78 59.
23) Finish, wiring and calibration of all field mounted instruments and flow measuring devices, non-equipment manufacturer-supplied instrumentation and field mounted gas monitoring devices and associated horns and lights PCSS shall furnish all instruments listed in the Instrument List included with Specification Section 40 70 00
Questions: Please verify the following:
The 1799-G Contract will be responsible for the installation of the field mounted gas monitoring devices and associated horns and lights.
The 1799-E Contract will be responsible to provide only the following instruments:

40 71 13 Magnetic Flow Meters
40 71 42 Variable Area Flow Meters

40 71 79 Flow Switches
40 72 23 Radar Level Meters
40 72 76 Level Switches
40 73 13 Pressure and Differential Pressure Gauges
40 73 36 Pressure and Differential Pressure Switches
40 75 05 Multi-Parameter Analyzer Transmitters
40 76 23 Combustible Gas Analyzers
40 76 33 Hydrogen Sulfide Analyzers

A46: Confirmed.
Confirmed. Contract 1799E is responsible for Specification Sections 40 61 00 through 40 78 59 per Addendum No. 2. Furnish, wiring, and calibration of all field-mounted instruments and flow measuring devices, non-equipment manufacturer-supplied instrumentation, and field-mounted gas monitoring devices and associated horns and lights shall be under Contract 1799E. Under Contract 1799E the PCSS shall furnish all instruments listed in the Instrument List included with Specification Section 40 70 00.

Q47: In Specification Section 40 71 43 "Variable Area Flow Meters," a maximum operating temperature is specified as 150F and the materials listed are clear acrylic or polycarbonate. Clear Acrylic or Polycarbonate Flow Tubes have a maximum temperature rating of 130F. Should the Flow Tube construction be changed to glass to adhere to the 150F temperature requirements or will the 130F rating of the Clear Acrylic or Polycarbonate be acceptable?

A47: See Changes to the Technical Specifications in this Addendum No. 3.

END OF ADDENDUM No. 3

SECTION 09 96 79 – ATMOSPHERIC PROTECTION AND PLANT SERVICE AREAS COATINGS

PART 1 - GENERAL

1.1 RELATED DOCUMENTS

A. Drawings and general provisions of the Contract, including General and Supplementary Conditions and Division 01 Specification Sections apply to this Section.

1.2 SUMMARY

A. Section includes surface preparation and application of high-performance coating systems for water and wastewater treatment on the following interior substrates:

1. Steel.
2. Ductile or cast iron.
3. Galvanized steel.
4. **Gypsum board.**

B. Related Requirements:
   1. **Section 09 96 76.33 "Wastewater Sludge Handling Coatings" for concrete surfaces at the interior of the existing Thickening Feed Tanks.**

1.3 DEFINITIONS

A. MPI Gloss Levels: Following define gloss levels according to ASTM D 523:

1. MPI Gloss Level 6 - Traditional Gloss: 70 to 85 units at 60 degrees.

B. Mild Exposure: Normal outdoor weathering and standard industrial exposures are considered mild environments. A normal industrial setting is one with low to moderate levels of humidity and condensation and little development of mold and mildew. A mild environment has only limited exposure to chemical fumes or mist, and occasional occurrences of chemical spills or splash. Regular cleaning with standard commercial chemical cleaning agents, with only occasional use of stronger chemical cleaning agents, is also characteristics of a mild environment. Metal corrosion will occur in a mild environment, but it is minimal. These are generally dry areas with little to no Hydrogen Sulfide (H2S), Chlorine, or other corrosive chemicals, or the area is damp.

C. Moderate Exposure: An atmosphere that can be characterized as corrosive, within reasonable limits, is considered a moderate environment. In an industrial setting, a moderate environment indicates intermittent exposure to high humidity and condensation with occasional development of mold and mildew. Exposure to heavy concentrations of chemical fumes or mist and accidental chemical spills or splash occurs occasionally in a moderate environment. Regular use of strong chemicals rather than standard commercial cleaning agent also changes a mild environment into a moderate one. Metal corrosion is common in a moderate environment.

D. Severe Exposure: An aggressively corrosive industrial or predominantly chemical environment with regular exposure to strong chemical fumes, mists, and dust is considered a severe environment. In an industrial setting, a severe environment is one with sustained exposure to high humidity and condensation that results in heavy development of mold and mildew. Frequent spilling and splashing of strong chemicals (acids, alkalis, oxidizers, and solvents) are also characteristic of a severe environment. Metal corrosion can be expected in a severe environment. Immersion conditions, marine environment with sustained exposure to saltwater spray, and arctic environment with long periods of extremely low temperature are considered severe environments. These are areas where if no high-performance coatings are applied on steel or concrete, very early failure and structural damage will be evident.

E. Paint: Various coating systems materials, including primers, emulsions, enamels, stains, sealers and fillers, and other applied materials, whether used as prime, intermediate or finish coats.

F. Finished Areas: Interior rooms, areas, and spaces in which exposed surfaces are finished by Work of this Section or other Sections. Non-exposed spaces above suspended ceilings are not to be included as part of painting Work, unless otherwise indicated.

1.4 ACTION SUBMITTALS

A. Product Data: For each type of product. Include preparation requirements and application instructions.

1. Indicate VOC content.

B. Samples for Initial Selection: For each type of topcoat product indicated.

C. Samples for Verification: For each type of coating system and each color and gloss of topcoat indicated.

1. Submit Samples on actual substrate material to be coated, 8 inches square.
2. Apply coats on Samples in steps to show each coat required for system.
3. Label each coat of each Sample.
4. Label each Sample for location and application area.

D. Product List: Use same designations indicated on Drawings and in Atmospheric Protection Coating Schedule and Plant Service Areas Coating Schedule. Include color designations and product runs (batch numbers).

1.5 CLOSEOUT SUBMITTALS

A. Coating Maintenance Manual: Upon conclusion of painting, Contractor, paint manufacturer, or supplier shall submit a coating maintenance manual that includes:

1. Area Summary with finish schedule.
2. Area Detail designating where each product, color, and finish was used.

3. **Product data pages and safety data sheets.**
4. **Care and cleaning instructions.**
5. **Touch-up procedures.**
6. **Color samples, 4 inches by 5 inches of each color and finish.**

1.6 MAINTENANCE MATERIAL SUBMITTALS

A. Furnish extra materials, from the same production run (batch number), that match products installed and that are packaged with protective covering for storage and identified with labels describing contents.

1. Coatings: 5 percent, but not less than 1 gal. of each material and color applied.

1.7 QUALITY ASSURANCE

A. Mockups: Apply mockups of each coating system indicated to verify preliminary selections made under Sample submittals, to demonstrate aesthetic effects, and to set quality standards for materials and execution.

1. Engineer will select one surface to represent surfaces and conditions for application of each coating system.

   a. Wall and Ceiling Surfaces: Provide samples of at least 100 sq. ft..
   b. Other Items: Engineer will designate items or areas required.

2. Final approval of color selections will be based on mockups.

   a. If preliminary color selections are not approved, apply additional mockups of additional colors selected by Engineer at no added cost to Owner.

3. Approval of mockups does not constitute approval of deviations from the Contract Documents contained in mockups unless Engineer specifically approves such deviations in writing.
4. Subject to compliance with requirements, approved mockups may become part of the completed Work if undisturbed at time of Substantial Completion.

1.8 DELIVERY, STORAGE, AND HANDLING

A. Store materials not in use in tightly covered containers in well-ventilated areas with ambient temperatures continuously maintained at not less than 45 deg F.

1. Maintain containers in clean condition, free of foreign materials and residue.
2. Remove rags and waste from storage areas daily.
3. Deliver materials on site in factory sealed containers from the manufacturer. Do not use materials from previous jobs.

1.9 FIELD CONDITIONS

A. Apply coatings only when temperature of surfaces to be coated and ambient air temperatures are within the coatings manufacturer's recommendations.

B. Do not apply coatings when relative humidity exceeds 85 percent; at temperatures less than 5 deg F above the dew point and rising; or to damp or wet surfaces.

C. Do not apply exterior coatings in snow, rain, fog, mist, and in conditions that do not meet the manufacturer's recommendations.

PART 2 - PRODUCTS

2.1 MANUFACTURERS

A. Manufacturers: Subject to compliance with requirements, available manufacturers offering products that may be incorporated into the Work include, but are not limited to the following:

1. Carboline Company (CAR).
2. PPG Paints (PPG).
3. The Sherwin-Williams Company (SWC).
4. Tnemec Company, Inc. (TNE).
5. **Benjamin Moore & Company (BMC)**

2.2 HIGH-PERFORMANCE COATINGS

A. Material Compatibility:

1. Each coating system within indicated substrates uses compatible material with one another, under conditions of service and application as demonstrated by manufacturer, based on testing and field experience.
2. Topcoat manufacturer recommends products in writing for use in each coating system coat and on indicated substrate.
3. Use products from same manufacturer for each coat in coating system.

B. Colors: As selected by Engineer from manufacturer's full range.

2.3 SOURCE QUALITY CONTROL

A. Testing of Coating Materials: Owner reserves the right to invoke the following procedure:

1. Owner will engage services of a qualified testing agency to sample coating materials. Contractor will be notified in advance and may be present when samples are taken. If coating materials have already been delivered to Project site, samples may be taken at Project site. Samples will be identified, sealed, and certified by testing agency.
2. Testing agency will perform tests for compliance with product requirements.
3. Owner may direct Contractor to stop applying coatings if test results show materials being used do not comply with product requirements. Contractor shall remove

noncomplying coating materials from Project site, pay for testing, and recoat surfaces coated with rejected materials. Contractor will be required to remove rejected materials from previously coated surfaces if, on recoating with complying materials, both coatings are incompatible.

PART 3 - EXECUTION

3.1 EXAMINATION

A. Examine substrates and conditions, with Applicator present, for compliance with requirements for maximum moisture content and other conditions affecting performance of the Work.

B. Verify suitability of substrates, including surface conditions and compatibility, with existing finishes and primers.

1. Application of coating indicates acceptance of surfaces and conditions.
2. Recoating of Previously Coated Surfaces: Verify conditions and compatibility between new and existing high-performance coating products.

C. Proceed with coating application only after unsatisfactory conditions have been corrected. Application of coating indicates acceptance of surfaces and conditions.

D. Gypsum Board Substrates: Verify that finishing compound is sanded smooth.

3.2 PREPARATION

A. Comply with manufacturer's written instructions applicable to substrates and coating systems indicated.

B. Remove hardware, covers, plates, and similar items already in place that are removable and are not to be coated.

1. If removal is impractical or impossible because of size or weight of item, provide surface-applied protection before surface preparation and coating.
2. After completing coating operations, use workers skilled in the trades involved to reinstall items that were removed.
3. Remove surface-applied protection if any.

C. Clean substrates of substances that could impair bond of coatings, including dust, dirt, oil, grease, and incompatible paints and encapsulants.

1. Remove incompatible primers and reprime substrate with compatible primers or apply tie coat as required to produce coating systems indicated.

D. Concrete Substrates: Remove release agents, curing compounds, efflorescence, and chalk. Do not paint surfaces if moisture content or alkalinity of surfaces to be painted exceeds that permitted in manufacturer's written instructions.

1. Concrete Floors: Remove oil, dust, grease, dirt, and other foreign materials. Comply with SSPC-SP-13/NACE 6 or ICRI 310.2R.
2. Clean surfaces with pressurized water. Use pressure range of 1,500 to 4,000 psi at 6 to 12 inches.
3. Abrasive blast clean surfaces to comply with SSPC-SP-13/NACE 6.
4. Prepare substrate with manufacturer's recommended Concrete Surface Profile (CSP) based on coating system to be applied:

    a. High-build coatings, 10 to 40 mils: CSP 3 to CSP 5.
    b. Self-leveling toppings, 50 mils to 1/8-inch: CSP 4 to CSP 6.

E. Masonry Substrates: Remove efflorescence and chalk.

1. Do not coat surfaces if moisture content, alkalinity of surfaces, or alkalinity of mortar joints exceeds that permitted in manufacturer's written instructions.
2. Clean surfaces with pressurized water. Use pressure range of 1500 to 4000 psi at 6 to 12 inches.

F. Steel Substrates: Remove rust, loose mill scale, and shop primer if any. Clean using methods recommended in writing by manufacturer.

G. Galvanized-Steel Substrates: Remove grease and oil residue from galvanized sheet metal by mechanical methods to produce clean, lightly etched surfaces that promote adhesion of subsequently applied coatings.

H. Plastic Substrates: Solvent wipe per SSPC-SP1 to remove dirt, grease, and any other surface contamination. Lightly abrade entire surface and repeat solvent wipe process.

I. All Substrates: Remove foreign materials, dust, dirt, and other deleterious films that impairs bond of paints to substrates.

J. Previously Finished Surfaces: Comply with paint manufacturer's specifications appropriate for substrate to be coated, for proper preparation of previously finished surfaces.

3.3 APPLICATION

A. Apply high-performance coatings in accordance with manufacturer's written instructions.

1. Use applicators and techniques suited for coating and substrate indicated.
2. Coat surfaces behind movable equipment and furniture same as similar exposed surfaces. Before final installation, coat surfaces behind permanently fixed equipment or furniture with prime coat only.
3. Coat backsides of access panels, removable or hinged covers, and similar hinged items to match exposed surfaces.
4. Do not apply coatings over labels of independent testing agencies or equipment name, identification, performance rating, or nomenclature plates.

B. Tint each undercoat a lighter shade to facilitate identification of each coat if multiple coats of the same material are to be applied. Tint undercoats to match color of finish coat but provide sufficient difference in shade of undercoats to distinguish each separate coat.

C. If undercoats or other conditions show through final coat, apply additional coats until cured film has a uniform coating finish, color, and appearance.

D. Apply coatings to produce surface films without cloudiness, spotting, holidays, laps, brush marks, runs, sags, ropiness, or other surface imperfections. Produce sharp glass lines and color breaks.

E. Film Thickness: Apply paint in wet film thickness (WFT) recommended by high-performance manufacturer to achieve specified dry film thickness (DFT) for each coat of paint. Since DFT varies among manufacturers, this reference is not included in Article "Atmospheric Protection Coating Schedule and Plant Service Areas Coating Schedule."

3.4 FIELD QUALITY CONTROL FOR STEEL, DUCTILE OR CAST IRON, AND GALVANIZED STEEL SUBSTRATES

A. General: Field quality control referenced in this Article includes testing of both pre-application quality assurance and post-installation quality control of high-performance coatings. Employ quality approved testing agency to perform testing.

1. Perform Quality Control Testing in the order identified in the following subparagraph.

   a. Testing Order: Dry Film Thickness Testing, followed by Adhesion Testing, followed by Holiday Testing.

2. Contractor shall touch up and restore coated surfaces damaged by testing.
3. Where existing coatings are removed to attach new work, contractor shall restablish coatings on existing substrates to match new coating.
4. If test results show that dry film thickness, holiday, and pull-off strength of applied coating does not comply with coating manufacturer's written instructions, pay for testing and apply additional coats as needed to provide dry film thickness, pull-off strength that complies with coating manufacturer's written instructions.
5. Owner or Owner's representative will conduct random independent inspections and tests for the final acceptance or rejection of pipe coating.

B. Quality Assurance Testing:

1. Surface Preparation Testing:

   a. Test surface profile of abrasive blasted surfaces with "Press-O-Film" tester tape or equivalent in accordance with NACE RP0287.
   b. Provide tester tape suitable for the intended profile height.
   c. Measure profile to a minimum tolerance of 0.1 mils, maximum.
   d. Use electronic surface profilometers necessary to verify tester tape measurements.

C. Quality Control Testing:

1. Dry Film Thickness Testing:

   a. Engage the services of a qualified testing and inspecting agency to inspect and test coatings for dry film thickness.

2. Adhesion Testing:

   a. General:

      1) Test a minimum of two pipes for adhesion from each lot of pipes to be coated up to 3,000 square feet of pipe. Conduct an additional adhesion test on every increment up to 2,000 square feet of pipe coated in excess of the first 3,000 square feet of pipe (i.e., if one workday of production is 7,000 square feet of pipe, four adhesion tests will be conducted on the pipe lot.). Conduct adhesion testing on not less than 50 percent of each pipe produced within a lot.
      2) A pipe lot is defined as the quantity of pipe that is coated by a single crew within a work shift, but not to exceed 12 hours.
      3) Perform adhesion tests not less than 24 hours after coating application. Tests conducted prior to 24 hours will be acceptable only if the test meets or exceeds the adhesion criteria specified and the test was requested by Owner.
      4) Randomly select pipe for adhesion testing. Owner reserves the right to perform adhesion testing at any time or location.

   b. Rejection of Coating:

      1) If any coatings within a lot fails to meet the test criteria specified for the coating type, that coatings are considered rejected along with all other coatings within the lot. Each coating within the rejected pipe lot will then be individually tested and rejected on a pipe-by-pipe basis in conformance with the test procedures and criteria specific for the coating type.
      2) Rejected coatings shall have all coating removed from full pipe length, pipe abrasive blasted, and recoated.

3. Holiday Testing:

   a. Conduct holiday tests on completed coatings after cure or 24-hours, whichever is less. Provide a high voltage testing equipment and test in accordance with NACE SP0274 and the Specifications.
   b. Use actual coating thickness for holiday testing.
   c. Provide holiday detector with an audible signal when contact is made between pipeline and electrode at coating holidays (defects). Provide a good ground and a low electrical resistance between pipeline and detector. Make only direct connections to uncoated areas or to pipe ends at holdback areas.
   d. Clean and dry pipe surface when testing. Always keep electrode in motion and in firm contact with coated surface while test voltage is being applied. Move electrode evenly over the surface at approximately 0.5 to 1 fps. Do not exceed 1 fps of travel time.
   e. Mark location of detected holidays for repair. Retest after repair.

3.5 CLEANING AND PROTECTION

A. After completing coating application, clean spattered surfaces. Remove spattered coatings by washing, scraping, or other methods. Do not scratch or damage adjacent finished surfaces.

B. Protect work of other trades against damage from coating operation. Correct damage to work of other trades by cleaning, repairing, replacing, and recoating, as approved by Engineer, and leave in an undamaged condition.

C. At completion of construction activities of other trades, touch up and restore damaged or defaced coated surfaces.

3.6 PLANT SERVICE AREAS COATING SCHEDULE

A. Miscellaneous Interior Process Support Areas, Non-submerged Surfaces, Mild to Moderate Exposure:

1. Structural Steel Substrates: Including but not limited to steel columns, beams, bracing.

a. Polysiloxane System:

1) Prime Coat:

a) CAR: Carboguard 60.
b) PPG: Amerlock 2/2 VOC/400/600.
c) SWC: Macropoxy 646 FC Epoxy.
d) TNE: Series 66.

2) Topcoat: (MPI Gloss Level 6).

a) CAR: Carboxane 2000.
b) PPG: PSX 700/805/ONE 750.
c) SWC: Sher-Loxane 800.
d) TNE: Series 740.

2. Black Steel Piping:

a. Polysiloxane System:

1) Prime Coat:

a) CAR: Carboguard 60.
b) PPG: Amerlock 2/2 VOC/400/600.
c) SWC: Macropoxy 646 FC Epoxy.
d) TNE: Series 66.

2) Topcoat: (MPI Gloss Level 6).

a) CAR: Carboxane 2000.
b) PPG: PSX 700/805/ONE 750.
c) SWC: Sher-Loxane 800.
d) TNE: Series 740.

3. Ductile Iron or Cast-Iron Substrates: Interior Atmospheric Pipe Exposure.

a. Polysiloxane System:

1) Prime Coat:

a) CAR: Carboguard 60/Carboguard 635.
b) PPG: Amerlock 2/2 VOC/400/600.
c) SWC: Macropoxy 646 FC Epoxy.
d) TNE: Series 66.

2) Topcoat: (MPI Gloss Level 6).

a) CAR: Carboxane 2000.
b) PPG: PSX 700/805/ONE 750.
c) SWC: Sher-Loxane 800.
d) TNE: Series 740.

4. Galvanized Metal Substrates: **Including but not limited to pour stops, pipe supports, duct supports, cable tray supports, and steel decking.**

a. Polysiloxane System:

1) Prime Coat:

a) CAR: Carboguard 60.
b) PPG: Amerlock 2/2 VOC/400/600.
c) SWC: Macropoxy 646.
d) TNE: Series 66.

2) Topcoat: (MPI Gloss Level 6).

a) CAR: Carboxane 2000.
b) PPG: PSX 700/805/ONE 750.
c) SWC: Sher-Loxane 800.
d) TNE: Series 740.

B. Gypsum Board Substrates:

1. High-Performance, Two Component Water Based Coating System:

a. Prime Coat: Primer sealer, latex, interior:

1) SWC: ProMar 200 Zero VOC Latex Primer, B28-2600.
2) PPG: Speedhide Interior Latex Sealer 6-2.
3) BMC: Fresh Start All Purpose Primer 023.

b. Intermediate Coat: Matching topcoat.
c. Topcoat: Two component, interior, water-based epoxy, eggshell finish (MPI Gloss Level 3):

1) SWC: Pro Industrial Waterbased Catalyzed Epoxy Egg-Shell, B73-360 Series.

2) **PPG: Aquapon WB EP Two-Component Ultra Low VOC Water-Based Epoxy Semi-Gloss Coating 98E-1 / 98E-100 Series.**
3) **BMC: Corotech Pre-Catalyzed Waterborne Epoxy Eggshell V342.**

d. **Topcoat: Two component, interior, water-based epoxy, gloss finish (MPI Gloss Level 6).**

1) **SWC: Pro Industrial Waterbased Catalyzed Epoxy Gloss, B73-300 Series.**
2) **PPG: Aquapon WB EP Two-Component Ultra Low VOC Water-Based Epoxy Gloss Coating 98E-1 / 98E-98 Series.**
3) **BMC: Corotech Waterborne Gloss Acrylic Epoxy V450.**

3.7 PIPING COLOR SCHEDULE

Component	Specified Color	Sherwin Williams Color	Comments
Afterburner Combustion Air	Green	Safety Green (SW4085)	
Ambient Air	Green	Safety Green (SW4085)	
Plant Air (Low Pressure)	Light Green	Emerald Ice (SW4069)	
Ash	Gray	Flint Gray (SW4019)	
Atomizing Air	Green	Safety Green (SW4085)	
Boiler Blowdown	Orange	Safety Orange (SW4083)	
Boiler Feedwater	Orange	Safety Orange (SW4083)	
Burner Combustion Air	Green	Safety Green (SW4085)	
Effluent Flushing Water	Gray	Flint Gray (SW4019)	
Cold Potable City Flushing Water	Blue	Dewpoint (SW4067)	
Drains (Area, Roof, Floor)	Black	Black (SW4090)	
Drains (Equipment, Filtrate, Duct)	Black	Black (SW4090)	
Fire Protection	Red	Safety Red (SW4081)	
Foam Spray Water	Gray	Flint Gray (SW4019)	
Foul Air	Cobalt Blue	Laser Blue (SW4079)	
FRP Flue Gas Ductwork	Cobalt Blue	Laser Blue (SW4079)	
Fuel Oil	Dark Green	Rain Forest (SW4071)	
Grit and Dewatered Sludge Feed	Brown	Bolt Brown (SW4001)	
Grit and Dewatered Sludge Transfer	Brown	Bolt Brown (SW4001)	
High Pressure Condensate	Orange	Safety Orange (SW4083)	
High Pressure	Gray	Flint Gray (SW4019)	

Component	Specified Color	Sherwin Williams Color	Comments
Hot Protected Water	Blue	Dewpoint (SW4067)	
Hydraulic Oil	Dark Green	Rain Forest (SW4071)	
Instrument Air	Green	Safety Green (SW4085)	
Lime	White	Pillar White (SW4029)	
Lime Stabilized Sludge Product	Buff	Pallet Tan (SW4003)	
Low Pressure Condensate	Orange	Safety Orange (SW4083)	
Lubrication Oil	Dark Green	Rain Forest (SW4071)	With White stripes at 6-foot intervals
Medium Pressure Condensate	Orange	Safety Orange (SW4083)	
Mixed Liquor	Gray	Flint Gray (SW4019)	
Natural Gas	Red	Safety Red (SW4081)	With Yellow stripes at 6-foot intervals
Overflow	Gray	Flint Gray (SW4019)	
Polymer, Diluted	Buff	Pallet Tan (SW4003)	
Polymer, Liquid	Buff	Pallet Tan (SW4003)	
Primary Effluent	Gray	Flint Gray (SW4019)	
Primary Scum	Tan	Tannery (SW4004)	
Primary Sludge	Brown	Bolt Brown (SW4001)	
Protected Water	Blue	Dewpoint (SW4067)	
Raw Sewage	Gray	Flint Gray (SW4019)	
Raw Sludge	Brown	Bolt Brown (SW4001)	
Recirculating Water	Orange	Safety Orange (SW4083)	
Return Activated Sludge	Brown	Bolt Brown (SW4001)	
Sanitary and Storm Drains	Black	Black (SW4090)	
Sanitary Force Main (Pressure)	Black	Black (SW4090)	
Saturated Low Pressure Steam	Orange	Safety Orange (SW4083)	
Saturated Medium Pressure Steam	Orange	Safety Orange (SW4083)	
Screening Process	Green	Safety Green (SW4085)	With Black stripes at 6-foot intervals
Scrubber Blowdown	Orange	Safety Orange (SW4083)	
Scrubber Drain (including bridge)	Cobalt Blue	Laser Blue (SW4079)	
Screening Recycle	Gray	Flint Gray (SW4019)	

Component	Specified Color	Sherwin Williams Color	Comments
Scum and Grease Process	**Tan**	**Tannery (SW4004)**	
Scum and Grease Reject	**Tan**	**Tannery (SW4004)**	
Scum and Grease Transfer	**Tan**	**Tannery (SW4004)**	
Secondary Clarifier Maintenance	**Yellow**	**Safety Yellow (SW4084)**	
Secondary Effluent	**Gray**	**Flint Gray (SW4019)**	
Secondary Scum	**Tan**	**Tannery (SW4004)**	
Superheated Low Pressure Steam	**Orange**	**Safety Orange (SW4083)**	
Superheated Medium Pressure Steam	**Orange**	**Safety Orange (SW4083)**	
Thickened Blended Sludge	**Brown**	**Bolt Brown (SW4001)**	
Thickened Primary Sludge	**Brown**	**Bolt Brown (SW4001)**	
Thickened Waste Activated Sludge	**Brown**	**Bolt Brown (SW4001)**	
Vacuum and Vacuum Exhaust Vent	**Black**	**Black (SW4090)**	
Waste Activated Sludge	**Brown**	**Bolt Brown (SW4001)**	

END OF SECTION 09 96 79

THIS PAGE INTENTIONALLY LEFT BLANK.

SECTION 233116 – NON-METAL DUCTS

PART 1 - GENERAL

1.1 RELATED DOCUMENTS

A. Drawings and general provisions of the Contract, including General and Supplementary Conditions and Division 01 Specification Sections, apply to this Section.

1.2 SUMMARY

A. Section Includes:
   1. CPVC ducts and fittings.

B. Related Requirements:
   1. Section 230548 "Vibration and Seismic Controls for HVAC" for vibration-isolated and restrained ductwork hangers and supports.
   2. Section 233113 "Metal Ducts" for single- and double-wall, rectangular and round ducts.

1.3 ACTION SUBMITTALS

A. Product Data: For each type of the following products:
   1. CPVC duct materials.

1.4 INFORMATIONAL SUBMITTALS

A. Seismic Qualification Data: Certificates, for nonmetal ducts, accessories, and components, from manufacturer.

   1. Basis for Certification: Indicate whether withstand certification is based on actual test of assembled components or on calculation.
   2. Dimensioned Outline Drawings of Equipment Unit: Identify center of gravity and locate and describe mounting and anchorage provisions.
   3. Detailed description of equipment anchorage devices on which the certification is based and their installation requirements.

B. Welding certificates.

C. Field quality-control reports.

1.5 QUALITY ASSURANCE

A. Hanger and Support Welding Qualifications: Qualify procedures and personnel according to the following:

1. AWS D1.1/D1.1M, "Structural Welding Code - Steel," for steel hangers and supports.
2. AWS D1.2/D1.2M, "Structural Welding Code - Aluminum," for aluminum hangers and supports.

PART 2 - PRODUCTS

2.1 PERFORMANCE REQUIREMENTS

A. Seismic Performance: Ducts to withstand the effects of earthquake motions determined in accordance with ASCE/SEI 7. See Section 230548 "Vibration and Seismic Controls for HVAC."

1. The term "withstand" means "the unit will remain in place without separation of any parts from the device when subjected to the seismic forces specified and the unit will be fully operational after the seismic event."
2. Component Importance Factor: Refer to specification section 230548.

B. Wind-Restraint Performance:

1. See Section 230548 "Vibration and Seismic Controls for HVAC" requirements.

C. Airstream Surfaces: Surfaces in contact with the airstream shall comply with requirements in ASHRAE 62.1, Section 5.4 - "Airstream Surfaces."

D. ASHRAE Compliance: Applicable requirements in ASHRAE 62.1, Section 5 - "Systems and Equipment" and Section 7 - "Construction and System Start-up."

E. ASHRAE/IES Compliance: Applicable requirements in ASHRAE/IES 90.1, Section 6.4.4 - "HVAC System Construction and Insulation."

F. NFPA Compliance:

1. NFPA 90A, "Installation of Air Conditioning and Ventilating Systems."
2. NFPA 90B, "Installation of Warm Air Heating and Air Conditioning Systems."

2.2 CPVC DUCTS AND FITTINGS

A. Manufacturers:

1. Corzan.
2. Or equal.

B. Duct and Fittings:

1. Material: Rigid, virgin CPVC compound complying with ASTM D1784 Cell Classification 23447.
2. Flammability: Maximum flame-spread index of not more than 25 without evidence of continued progressive combustion and a smoke-developed index of not more than 50.
3. Maximum Service Temperature: 200 deg F.

4. External Loading Properties: ASTM D2412.
5. Round Fittings: Socket end molded of same material, pressure class, and joining method as duct.

C. Joining Materials: CPVC solvent cement complying with ASTM D2564.

D. Fabrication:

1. Fabricate joints, seams, transitions, reinforcement, elbows, branch connections, and access doors and panels according to SMACNA's "Thermoplastic Duct (PVC) Construction Manual," Ch. 3, "Standards of Construction for PVC Duct Systems."

2.3 HANGERS AND SUPPORTS

A. Hanger Rods for Noncorrosive Environments: Zinc-plated steel rods and nuts.

B. Hanger Rods for Corrosive Environments: Electrogalvanized, all-thread rods or galvanized rods with threads painted with zinc-chromate primer after installation.

C. Strap and Rod Sizes: Comply with SMACNA's "HVAC Duct Construction Standards - Metal and Flexible," Table 5-2, "Minimum Hanger Sizes for Round Duct."

D. Steel Cables: ASTM A603, galvanized-steel cables with end connections made of stainless-steel assemblies with brackets, swivel, and bolts designed for duct hanger service; with an automatic-locking and clamping device.

E. Trapeze and Riser Supports: Steel shapes complying with ASTM A36/A36M.

2.4 SEISMIC-RESTRAINT DEVICES

A. General Requirements for Restraint Components: Rated strengths, features, and applications shall be as defined in reports by an evaluation service member of ICC-ES or an agency acceptable to authorities having jurisdiction.

1. Structural Safety Factor: Allowable strength in tension, shear, and pullout force of components shall be at least four times the maximum seismic forces to which they will be subjected.

B. Channel Support System: Shop- or field-fabricated support assembly made of slotted steel channels with accessories for attachment to braced component at one end and to building structure at the other end. Include matching components and corrosion-resistant coating.

C. Restraint Cables: ASTM A492, stainless-steel cables with end connections made of stainless-steel assemblies with brackets, swivel, and bolts designed for restraining cable service; with an automatic-locking and clamping device or double-cable clips.

D. Mechanical Anchor Bolts: Drilled-in and stud-wedge or female-wedge type. Select anchor bolts with strength required for anchor and as tested according to ASTM E488/E488M.

PART 3 - EXECUTION

3.1 DUCT INSTALLATION

A. Drawing plans, schematics, and diagrams indicate general location and arrangement of duct system. Indicated duct locations, configurations, and arrangements were used to size ducts and calculate friction loss for air-handling equipment sizing and for other design considerations. Install duct systems as indicated unless deviations to layout are approved on Shop Drawings and Coordination Drawings.

B. Install duct sections in maximum practical lengths with fewest possible joints.

C. Install factory- or shop-fabricated fittings for changes in direction, size, and shape and for branch connections.

D. Unless otherwise indicated, install ducts vertically and horizontally, and parallel and perpendicular to building lines.

E. Install ducts close to walls, overhead construction, columns, and other structural and permanent enclosure elements of building.

F. Install ducts with a minimum clearance of 1 inch, plus allowance for insulation thickness (if present).

G. Route ducts to avoid passing through transformer vaults and electrical equipment rooms and enclosures.

H. Where ducts pass through non-fire-rated interior partitions and exterior walls, and are exposed to view, cover the opening between the partition and duct or duct insulation with sheet metal flanges. Overlap openings on four sides by at least 1-1/2 inches.

I. Install heating coils, cooling coils, air filters, dampers, and all other duct-mounted accessories in air ducts where indicated on Drawings.

J. Protect duct interiors from moisture, construction debris and dust, and other foreign materials both before and after installation. Comply with SMACNA's "IAQ Guidelines for Occupied Buildings under Construction," Appendix G, "Duct Cleanliness for New Construction Guidelines."

K. Elbows: Use long-radius elbows wherever they fit.

1. Fabricate 90-degree rectangular mitered elbows to include turning vanes, and 90-degree round elbows with a minimum of three segments for 12 inches and smaller and a minimum of five segments for 14 inches and larger.

L. Branch Connections: Use lateral or conical branch connections.

M. Install CPVC ducts and fittings to comply with SMACNA's "Thermoplastic Duct (PVC) Construction Manual."

3.2 HANGER AND SUPPORT INSTALLATION

A. Install hangers and supports for CPVC ducts and fittings to comply with SMACNA's "Thermoplastic Duct (PVC) Construction Manual," Ch. 3, "Standards of Construction for PVC Duct Systems."

B. Building Attachments: Concrete inserts or structural-steel fasteners appropriate for construction materials to which hangers are being attached.

1. Install concrete inserts before placing concrete.
2. Do not use powder-actuated concrete fasteners for seismic restraints.

C. Install upper attachments to structures. Select and size upper attachments with pull-out, tension, and shear capacities appropriate for supported loads and building materials where used.

3.3 SEISMIC-RESTRAINT-DEVICE INSTALLATION

A. Install ducts with hangers and braces designed to support the duct and to restrain against seismic forces required by applicable building codes. See Section 230548 "Vibration and Seismic Controls for HVAC." Comply with ASCE/SEI 7.

1. Space lateral supports a maximum of 40 feet o.c., and longitudinal supports a maximum of 80 feet o.c.
2. Brace a change of direction longer than 12 feet.

B. Select sizes of components so strength will be adequate to carry calculated static and seismic loads within restraint device capacity.

C. Install restraint cables so they do not bend across edges of adjacent equipment or building structure.

D. Install restraint cables where ducts are suspended with vibration isolators.

E. Install seismic-restraint devices using methods approved by agency acceptable to authorities having jurisdiction.

F. Attachment to Structure: If specific attachment is not indicated, anchor bracing and restraints to structure to flanges of beams, to upper truss chords of bar joists, or to concrete members.

G. Drilling for Post-Installed Concrete Anchors:

1. Identify position of reinforcing steel and other embedded items prior to drilling holes for anchors. Do not damage existing reinforcement or embedded items during drilling. Notify Architect if reinforcing steel or other embedded items are encountered during drilling. Locate and avoid prestressed tendons, electrical and telecommunications conduit, and water and gas lines.
2. Do not drill holes in concrete or masonry until concrete, mortar, or grout has achieved full design strength.

3. Mechanical-Type Anchor Bolts: Protect threads from damage during anchor installation. Heavy-duty sleeve anchors shall be installed with sleeve fully engaged in the structural element to which anchor is to be fastened.
4. Adhesive-Type Anchor Bolts: Clean holes to remove loose material and drilling dust prior to installation of adhesive. Place adhesive in holes proceeding from the bottom of the hole and progressing toward the surface in such a manner as to avoid introduction of air pockets in the adhesive.
5. Set anchors to manufacturer's recommended torque, using a torque wrench.
6. Install zinc-coated steel anchors for interior applications and stainless-steel anchors for applications exposed to weather.

3.4 STARTUP SERVICE

A. Air Balance: Comply with requirements in Section 230593 "Testing, Adjusting, and Balancing for HVAC."

3.5 FIELD QUALITY CONTROL

A. Testing Agency: Engage a qualified testing agency to perform tests and inspections.

B. Manufacturer's Field Service: Engage a factory-authorized service representative to test and inspect components, assemblies, and equipment installations, including connections.

C. Perform tests and inspections with the assistance of a factory-authorized service representative.

1. Leakage Tests:

a. Comply with SMACNA's "HVAC Air Duct Leakage Test Manual." Submit a test report for each test.
b. Where static pressure and leakage values shown below differ from those in the SMACNA manual, the more stringent values shall apply.
c. Test the following systems:

1) Ducts with a Pressure Class Higher Than 3-Inch wg: Test representative duct sections totaling no less than 25 percent of total installed duct area for each designated pressure class.

d. Disassemble, reassemble, and seal segments of systems to accommodate leakage testing and for compliance with test requirements.
e. Test for leaks before applying external insulation.
f. Conduct tests at static pressures equal to maximum design pressure of system or section being tested. If static-pressure classes are not indicated, test entire system at maximum system design pressure. Do not pressurize systems above maximum design operating pressure.
g. Give seven days' advance notice for testing.

END OF SECTION 23 31 16

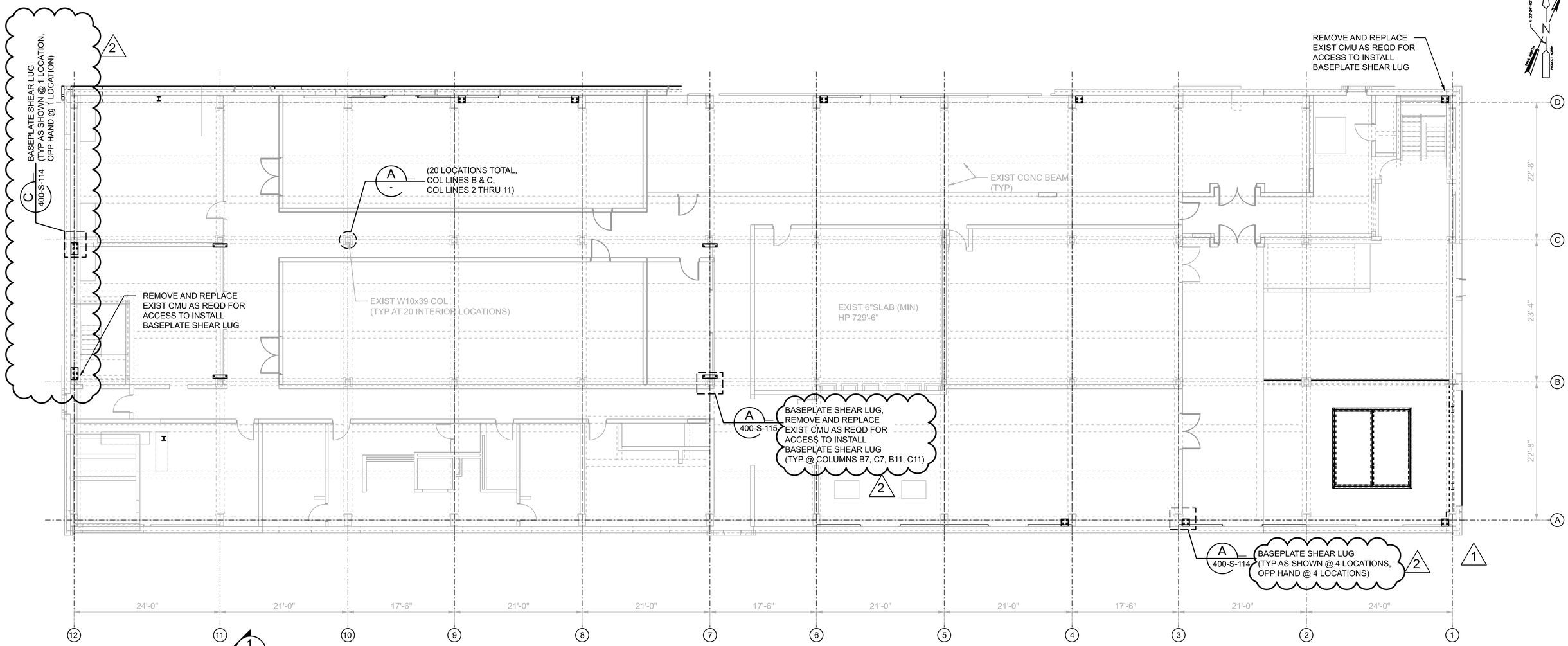

DEWATERING BUILDING (FACILITY 400) - FIRST FLOOR PLAN

SCALE: 1/8" = 1'-0"

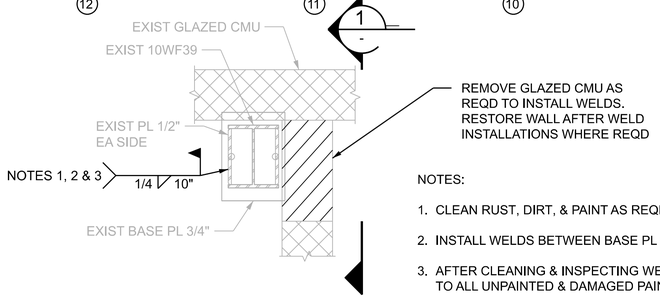

NOTES:

1. CLEAN RUST, DIRT, & PAINT AS REQD TO INSTALL NEW WELDS.
2. INSTALL WELDS BETWEEN BASE PL & 1/2" COLUMN PL.
3. AFTER CLEANING & INSPECTING WELDS, APPLY PRIMER & PAINT TO ALL UNPAINTED & DAMAGED PAINT SURFACES.

DETAIL A -

SCALE: 1" = 1'-0"

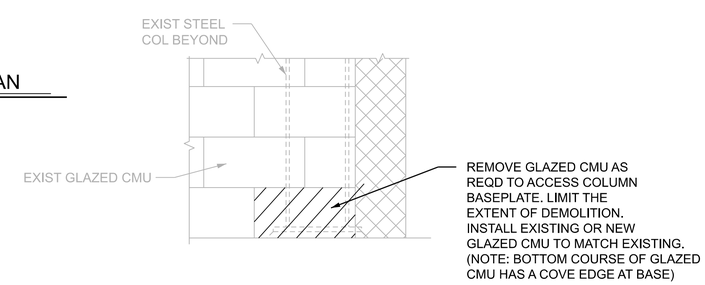

SECTION 1 -

SCALE: 1" = 1'-0"

1/8" = 1'-0"

8 4 0 8

Designed by:	REVISION			
J. ZANOTTI	REV No.	DATE	DESCRIPTION	APPV
Drawn by:	1	8/13/24	ADDENDUM NO. 1	JMZ
B. BENNETT	2	9/24	ADDENDUM NO. 3	JMZ
Checked by:				
J. ZANOTTI				

CDM Smith
ONE ALLEGHENY SQUARE
NOVA TOWER 1, SUITE 200
PITTSBURGH, PA 15212
TEL: (412) 201-5500

COMMONWEALTH OF PENNSYLVANIA
REGISTERED PROFESSIONAL ENGINEER
JOSEPH M. ZANOTTI
NO. PE088840
7/11/24

alcosan allegheny county sanitary authority
ARLETTA SCOTT WILLIAMS
EXECUTIVE DIRECTOR, ALCOSAN
3300 PREBLE AVE.
PITTSBURGH, PA 15233
(412) 766 - 4810
www.alcosan.org

ALLEGHENY COUNTY SANITARY AUTHORITY
WASTEWATER TREATMENT PLANT
SOLIDS THICKENING AND DEWATERING IMPROVEMENTS

400-S-102
DEWATERING BUILDING FIRST FLOOR PLAN

Contract:	1799
CAD File Name:	400S102.DGN
Date:	7/11/2024
Sheet:	19 of 440

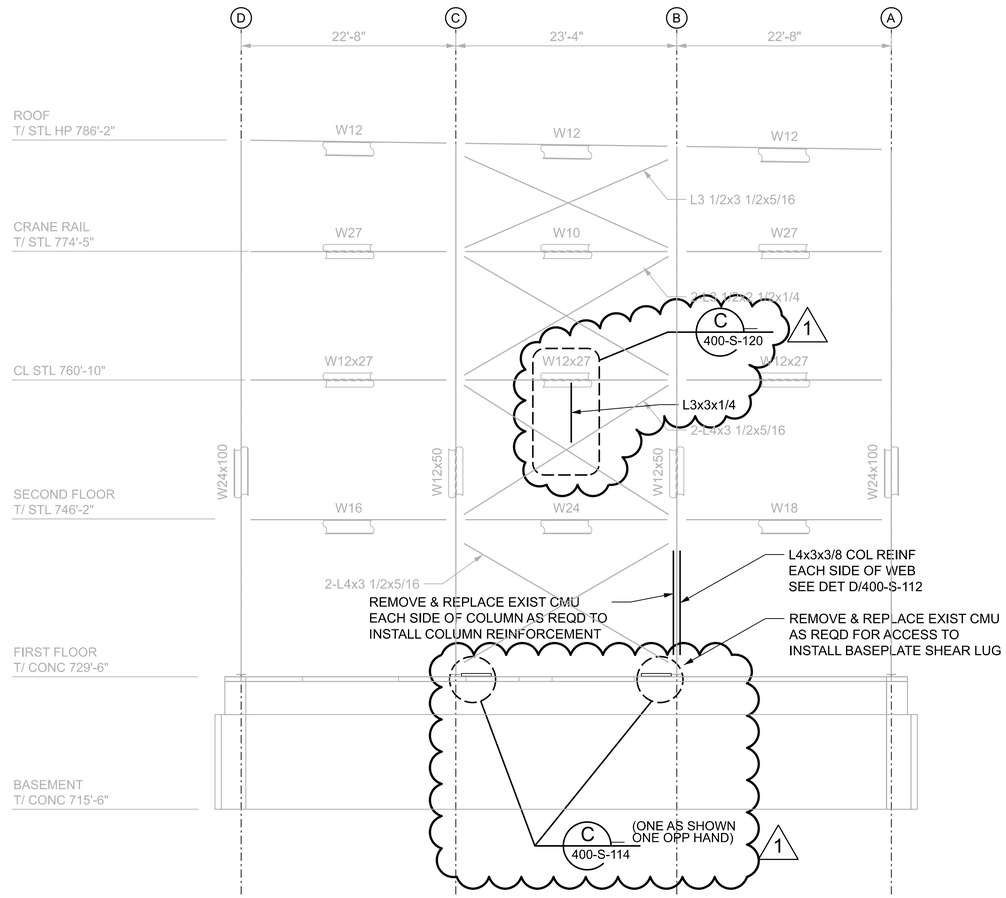

DEWATERING BUILDING (FACILITY 400) - WEST WALL (LINE 12) FRAMING ELEVATION

SCALE: 1/8" = 1'-0"

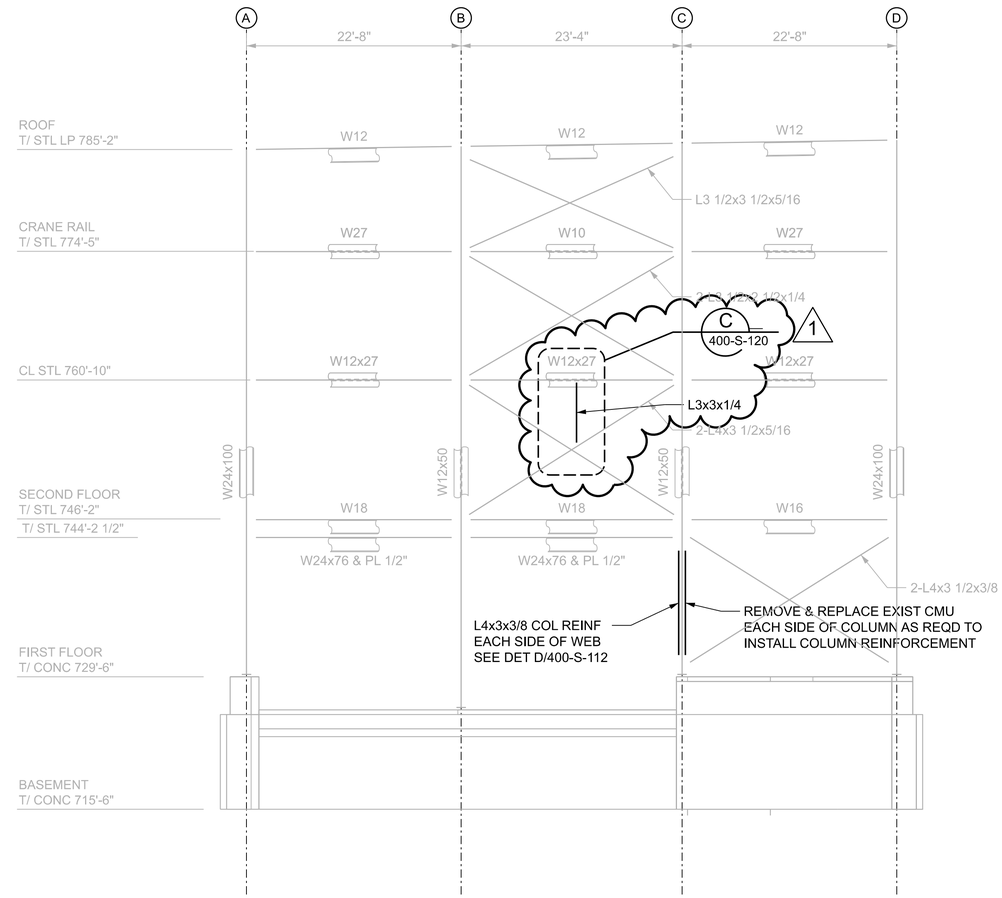

DEWATERING BUILDING (FACILITY 400) - EAST WALL (LINE 1) FRAMING ELEVATION

SCALE: 1/8" = 1'-0"

1/8" = 1'-0"

8 4 0 8

Designed by: J. ZANOTTI	REVISION			
	REV No.	DATE	DESCRIPTION	APPV
	1	9/24	ADDENDUM NO. 3	JMZ
Drawn by: B. BENNETT				
Checked by: J. ZANOTTI				

CDM Smith
ONE ALLEGHENY SQUARE
NOVA TOWER 1, SUITE 200
PITTSBURGH, PA 15212
TEL: (412) 201-5500

COMMONWEALTH OF PENNSYLVANIA
REGISTERED PROFESSIONAL
JOSEPH M. ZANOTTI
ENGINEER
NO. PE036984-E
7/8/24

ARLETTA SCOTT WILLIAMS
EXECUTIVE DIRECTOR, ALCOSAN

3300 PREBLE AVE.
PITTSBURGH, PA 15233
(412) 766 - 4810

www.alcosan.org

ALLEGHENY COUNTY SANITARY AUTHORITY
WASTEWATER TREATMENT PLANT
SOLIDS THICKENING AND DEWATERING IMPROVEMENTS

400-S-109
DEWATERING BUILDING
EAST & WEST WALL FRAMING ELEVATION

Contract: 1799
CAD File Name: 400S109.DGN
Date: 7/11/2024
Sheet: 26 of 440

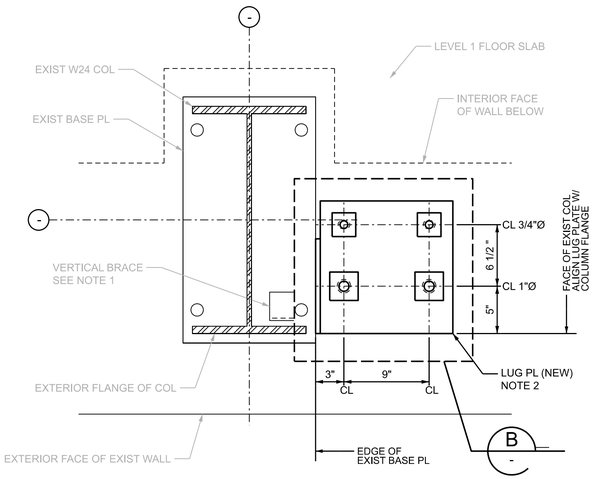

DETAIL A
SCALE: 1 1/2" = 1'-0" 400-S-102

NOTES:

1. THIS DETAIL ASSUMES THAT THE VERTICAL BRACES ARE LOCATED TOWARDS THE EXTERIOR FLANGE OF THE COLUMN. IF BRACES ARE WITHIN 3" OF THE CL OF THE COLUMN CONTACT THE ENGINEER FOR DIRECTION. A MODIFIED LUG PLATE MAY BE REQD.
2. PRIOR TO DETAILING AND FABRICATING LUG PLATES, CONTRACTOR SHALL VERIFY ACCESS IS AVAILABLE TO DRILL HOLES FOR ANCHOR RODS. IF ACCESS IS NOT AVAILABLE AT ALL LOCATIONS, CONTACT ENGINEER FOR FURTHER DIRECTION.

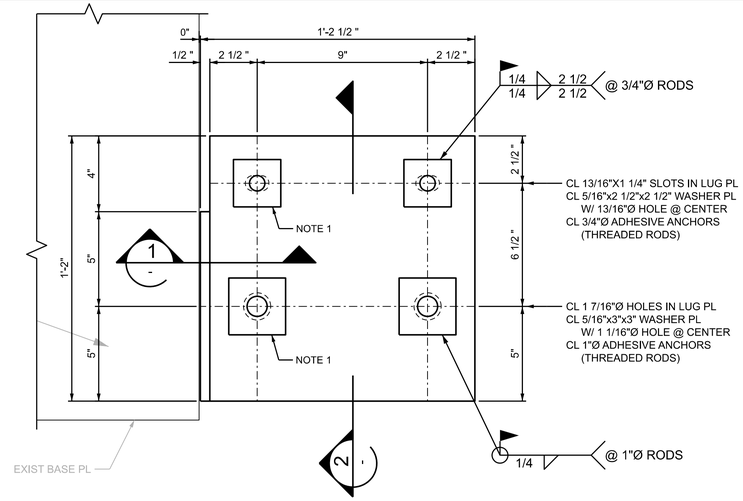

DETAIL B
SCALE: 1 1/2" = 1'-0"

NOTES:

1. PRIOR TO TIGHTENING NUTS FOR ANCHORS, ALIGN PL WASHERS SUCH THAT THE SLOTS AND WASHER EDGES ARE PARALLEL TO THE EDGES OF THE LUG PL. INSTALL WELDS AT PL WASHERS PRIOR TO TIGHTENING NUTS ON ANCHORS.

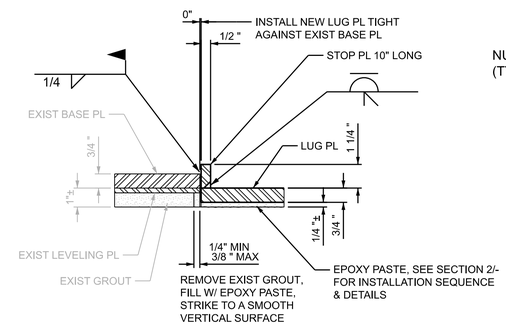

SECTION 1
SCALE: 3" = 1'-0"

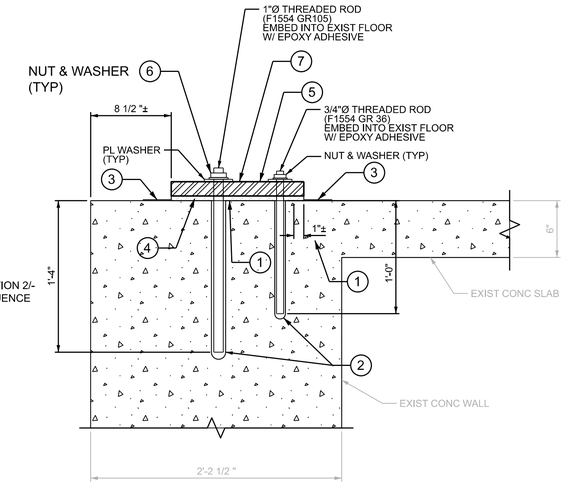

NOTES:

1. MILDLY ABRADE THE EXISTING CONCRETE SURFACE WHERE EPOXY PASTE & LUG PLATE WILL BEAR. CLEAN ALL DEBRIS, LOOSE CONCRETE, OILS, ETC. STOP ABRADED ZONE 1" FROM NEW EDGE OF EPOXY ZONE.
2. DRILL HOLES FOR ANCHOR RODS. INSTALL RODS W/ EPOXY ADHESIVE. STRIKE EPOXY FLUSH W/ SURFACE OF EXIST FLOOR.
3. MASK THE EXIST FLOOR W/ TAPE TO DEFINE THE EPOXY ZONE. USE REMOVABLE TAPE TO PREVENT OVER RUN OF EPOXY PASTE.
4. JUST PRIOR TO INSTALLING THE LUG PLATE, INSTALL A 1/4"± LAYER OF EPOXY ADHESIVE UNDER THE FULL AREA OF THE LUG PLATE.
5. IMMEDIATELY AFTER INSTALLING THE EPOXY ADHESIVE, INSTALL & ALIGN THE LUG PLATE. DO NOT INSTALL NUTS & ANCHORS. REMOVE EDGE TAPE BEFORE EPOXY HARDENS. ALLOW PASTE TO CURE & HARDEN.
6. COMPLETELY INSTALL PLATE WASHERS, NUTS, & WELDS AS SHOWN AT DETAIL B & SECTION 1.
7. PAINT ALL STEEL AS REQD (SEE SPECIFICATIONS).

SECTION 2
SCALE: 3" = 1'-0"

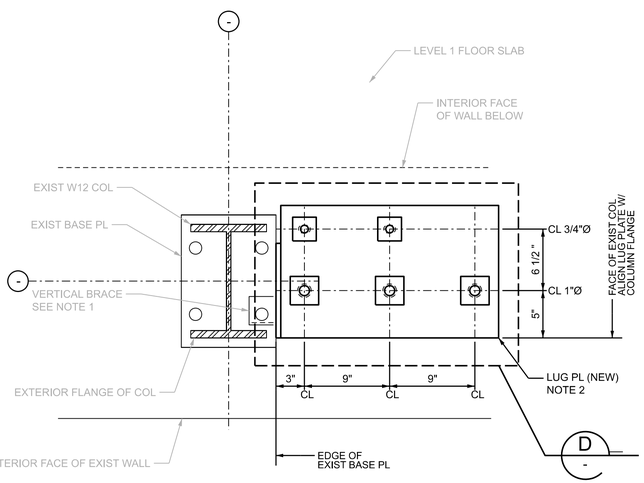

DETAIL C
SCALE: 1 1/2" = 1'-0" 400-S-102

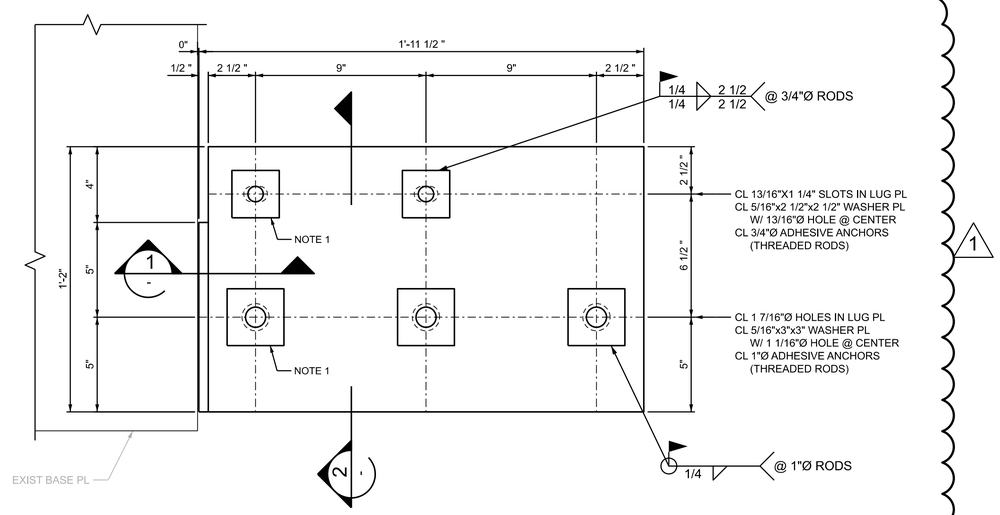

DETAIL D
SCALE: 1 1/2" = 1'-0"

1 1/2" = 1'-0"
.67 .33 0 .67

Designed by: J. ZANOTTI	REV No.	DATE	DESCRIPTION	APPV
Drawn by: B. BENNETT	1	9/24	ADDENDUM NO. 3	JMZ
Checked by: J. ZANOTTI				

REVISION

CDM Smith
ONE ALLEGHENY SQUARE
NOVA TOWER 1, SUITE 200
PITTSBURGH, PA 15212
TEL: (412) 201-5500

COMMONWEALTH OF PENNSYLVANIA REGISTERED PROFESSIONAL ENGINEER JOSEPH M. ZANOTTI NO. PE059816-E 7/9/24

alcosan allegheny county sanitary authority

ARLETTA SCOTT WILLIAMS
EXECUTIVE DIRECTOR, ALCOSAN

3300 PREBLE AVE.
PITTSBURGH, PA 15233
(412) 766 - 4810

www.alcosan.org

ALLEGHENY COUNTY SANITARY AUTHORITY
WASTEWATER TREATMENT PLANT
SOLIDS THICKENING AND DEWATERING IMPROVEMENTS

400-S-114
STRUCTURAL
SECTIONS AND DETAILS V

Contract: 1799
CAD File Name: 400S114.DGN
Date: 7/11/2024
Sheet: 31 of 440

PROCEDURE (ONLY WORK ON ONE SET OF ANGLES AT A TIME):

1. FLAME CUT EXPOSED PLATE TO BE FLUSH WITH LEGS OF ANGLES.
2. PROVIDE MEANS TO MAINTAIN SQUARENESS OF NEW PLATE TO ANGLES.
3. ADD NEW PL 1/4"x4" TO END OF LEGS.
4. REPEAT FOR NEXT SET OF DOUBLE ANGLES.

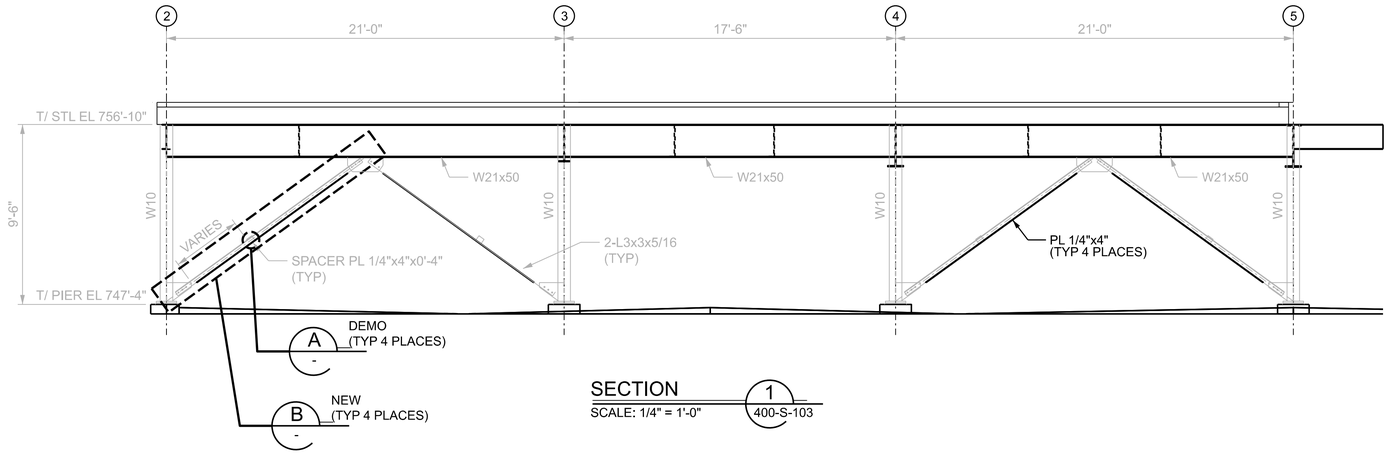

SECTION 1 / 400-S-103
SCALE: 1/4" = 1'-0"

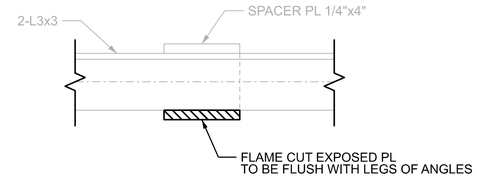

DETAIL A
SCALE: 3" = 1'-0"

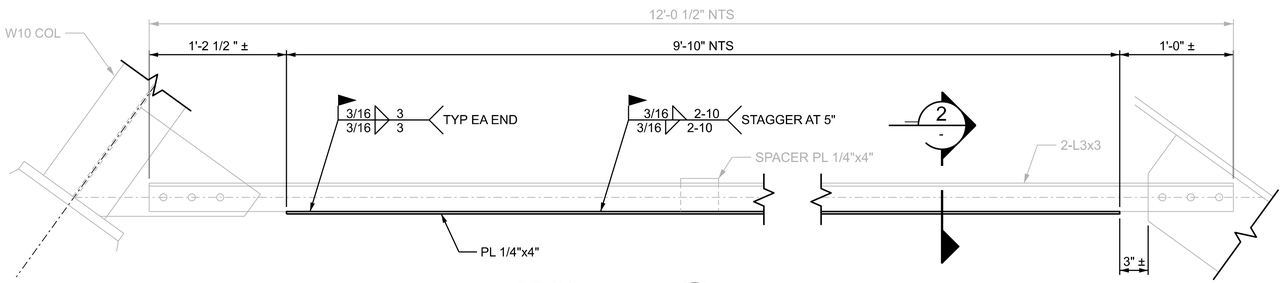

DETAIL B
SCALE: 1 1/2" = 1'-0"

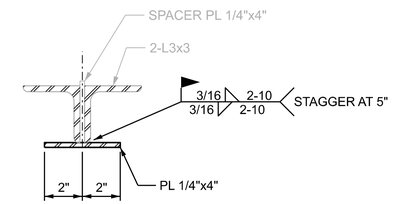

SECTION 2
SCALE: 3" = 1'-0"

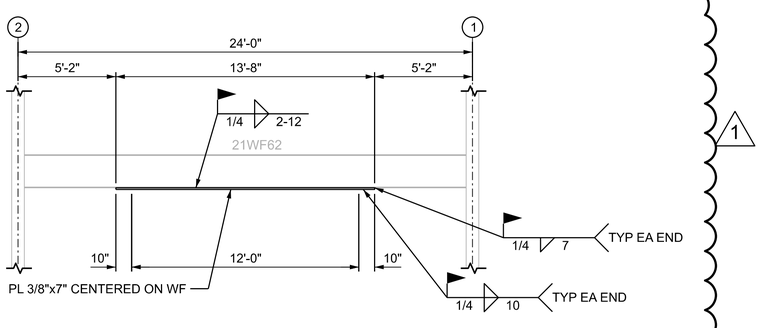

SECTION 3
SCALE: 1/4" = 1'-0"
400-S-103

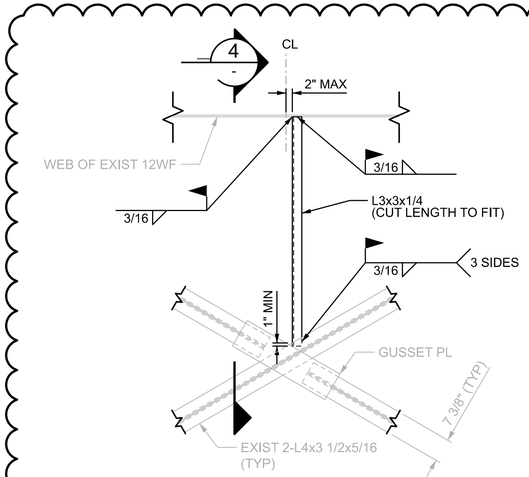

DETAIL C
SCALE: NTS
400-S-109

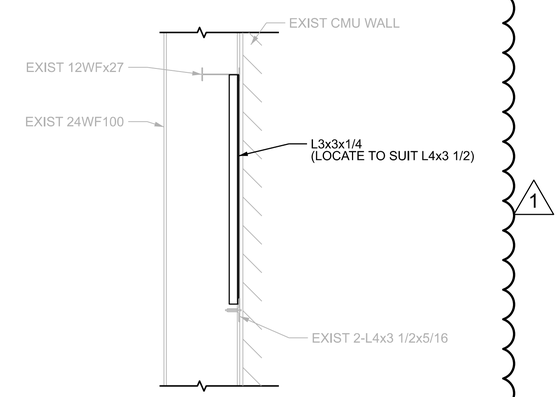

SECTION 4
SCALE: NTS

1/4" = 1'-0"
4 2 0 4

Designed by:	REVISION			
	REV No.	DATE	DESCRIPTION	APPV
J. ZANOTTI	1	9/24	ADDENDUM NO. 3	JMZ
Drawn by:				
B. BENNETT				
Checked by:				
J. ZANOTTI				

CDM Smith
ONE ALLEGHENY SQUARE
NOVA TOWER 1, SUITE 200
PITTSBURGH, PA 15212
TEL: (412) 201-5500

COMMONWEALTH OF PENNSYLVANIA
REGISTERED PROFESSIONAL
JOSEPH M. ZANOTTI
ENGINEER
NO. PE059894-E
7/8/24

alcosan
allegheny county sanitary authority
ARLETTA SCOTT WILLIAMS
EXECUTIVE DIRECTOR, ALCOSAN
3300 PREBLE AVE.
PITTSBURGH, PA 15233
(412) 766 - 4810
www.alcosan.org

ALLEGHENY COUNTY SANITARY AUTHORITY
WASTEWATER TREATMENT PLANT
SOLIDS THICKENING AND DEWATERING IMPROVEMENTS

400-S-120
DEWATERING BUILDING
VERTICAL BRACING MODIFICATIONS

Contract: 1799
CAD File Name: 400S120.DGN
Date: 7/11/2024
Sheet: 37 of 440

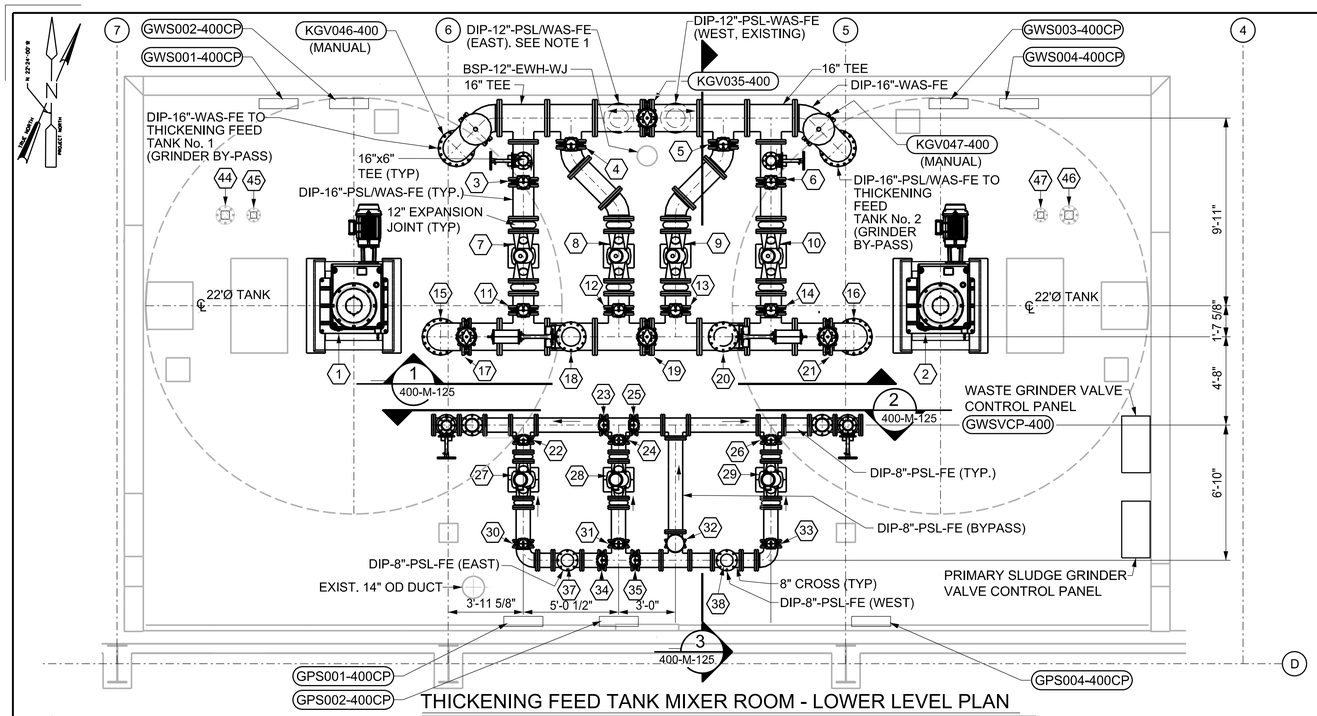

THICKENING FEED TANK MIXER ROOM - LOWER LEVEL PLAN

SCALE: 1/4" = 1'-0"

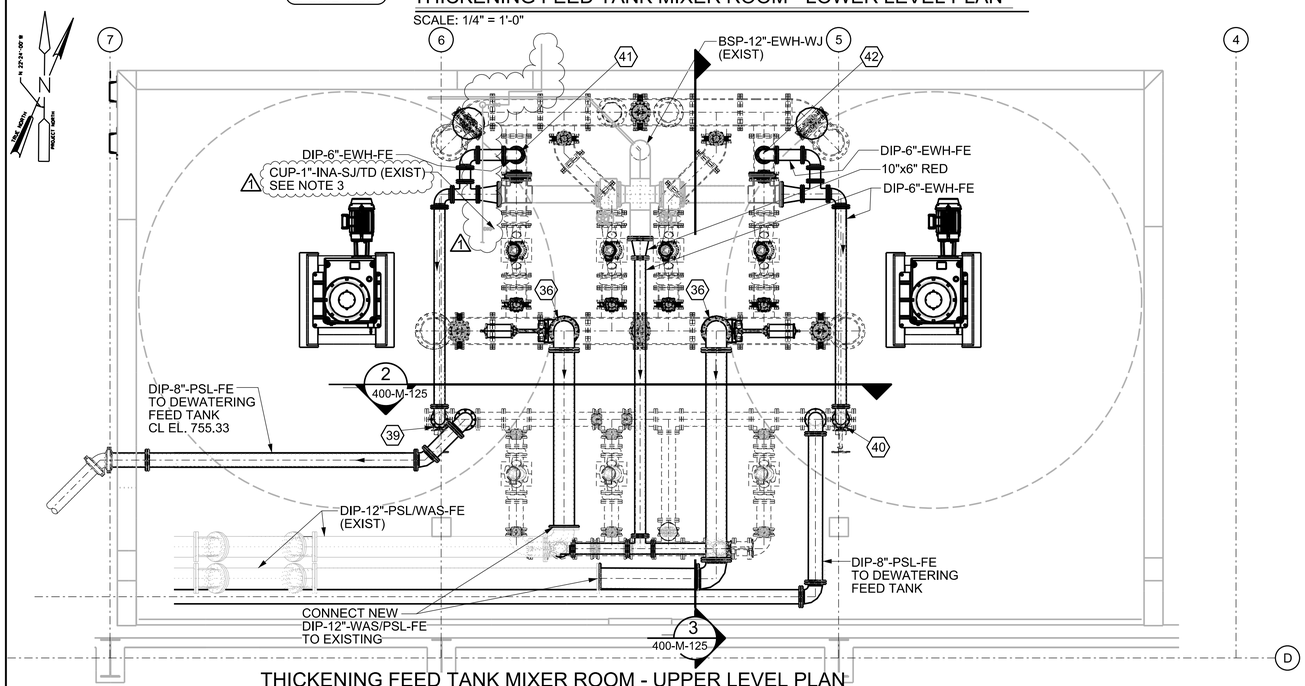

THICKENING FEED TANK MIXER ROOM - UPPER LEVEL PLAN

SCALE: 1/4" = 1'-0"

KEYED NOTES:

1. TEM001-400 THICKENING FEED MIXER No. 1
2. TFM002-400 THICKENING FEED MIXER No. 2
3. KGV031-400 12" DIA, PNEUMATIC
4. KGV032-400 12" DIA, PNEUMATIC
5. KGV033-400 12" DIA, PNEUMATIC
6. KGV034-400 12" DIA, PNEUMATIC
7. GWS001-400 WASTE SLUDGE GRINDER No. 1
8. GWS002-400 WASTE SLUDGE GRINDER No. 2
9. GWS003-400 WASTE SLUDGE GRINDER No. 3
10. GWS004-400 WASTE SLUDGE GRINDER No. 4
11. KGV036-400 12" DIA, PNEUMATIC
12. KGV037-400 12" DIA, PNEUMATIC
13. KGV038-400 12" DIA, PNEUMATIC
14. KGV039-400 12" DIA, PNEUMATIC
15. DIP-16"-WAS-FE TO THICKENING FEED TANK No. 1
16. DIP-16"-WAS-FE TO THICKENING FEED TANK No. 2
17. KGV041-400 16" DIA, PNEUMATIC
18. KGV042-400 12" DIA, PNEUMATIC
19. KGV040-400 16" DIA, PNEUMATIC
20. KGV043-400 12" DIA, PNEUMATIC, VERTICAL
21. KGV044-400 16" DIA, PNEUMATIC
22. KGV026-400 8" DIA, PNEUMATIC
23. KGV029-400 8" DIA, PNEUMATIC
24. KGV027-400 8" DIA, PNEUMATIC
25. KGV030-400 8" DIA, PNEUMATIC
26. KGV028-400 8" DIA, PNEUMATIC
27. GPS001-400 PRIMARY SLUDGE GRINDER No. 1
28. GPS002-400 PRIMARY SLUDGE GRINDER No. 2
29. GPS004-400 PRIMARY SLUDGE GRINDER No. 4
30. KGV021-400 8" DIA, PNEUMATIC
31. KGV022-400 8" DIA, PNEUMATIC
32. KGV023-400 MANUAL
33. KGV024-400 8" DIA, PNEUMATIC
34. KGV028-400 8" DIA, PNEUMATIC
35. KGV025-400 8" DIA, PNEUMATIC
36. DIP-12"-PSL/WAS-FE TO DEWATERING FEED TANKS
37. KGV052-400 IN VERTICAL
38. KGV053-400 IN VERTICAL
39. KGV055-400 IN VERTICAL
40. KGV057-400 IN VERTICAL
41. KGV056-400 IN VERTICAL
42. KGV068-400 IN VERTICAL
43. 3/4" HOSE BIBB
44. LS-L400TFT001A LEVEL SWITCH HIGH
45. LE-L400TFT001 LEVEL TRANSMITTER
46. LS-L400TFT002A LEVEL SWITCH HIGH
47. LE-L400TFT002 LEVEL TRANSMITTER

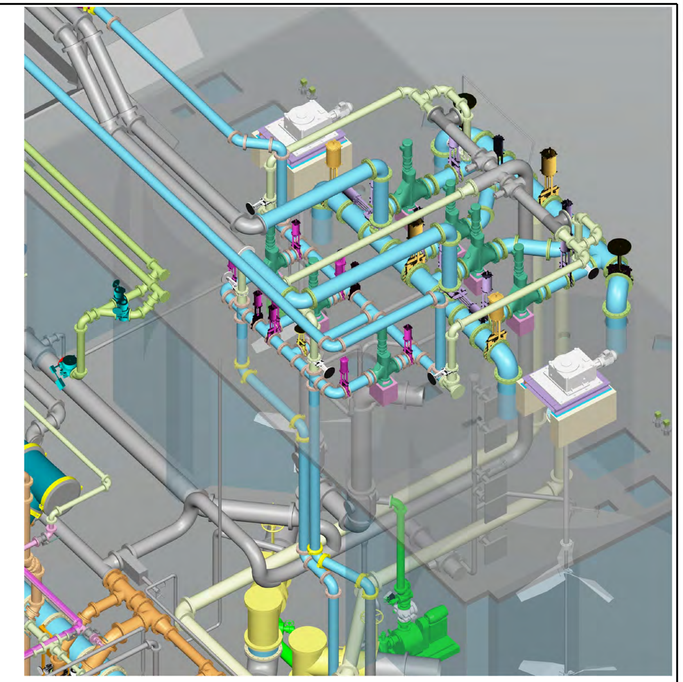

THICKENING FEED TANK MIXER ROOM - ISOMETRIC

NO SCALE

NOTES:

1. REMOVE AND REPLACE VERTICAL DIP-12"-WAS-FE PIPING FROM MIXER ROOM FLOOR TO THICKENING FEED TANK GALLERY BELOW. SEE ISOMETRIC, THIS DWG.
2. REFER TO SPECIFICATION SECTION 015200 FOR MAINTENANCE OF PLANT OPERATION AND CONSTRUCTION SEQUENCING.
3. CONTRACTOR TO FIELD ROUTE AIR PIPING TO ALL PNEUMATIC VALVES. REFER TO PROCESS AND INSTRUMENTATION DIAGRAMS FOR ADDITIONAL DETAILS.
4. RELOCATE EXISTING NON-POTABLE WATER LINE TO ACCOMODATE NEW VALVE CONTROL PANELS. COORDINATE WITH PLUMBING CONTRACTOR.

BAR SCALE: 1/4" = 1'-0"

4 2 0 4

Designed by: L. SCHAICH	REVISION			
	REV No.	DATE	DESCRIPTION	APPV
	1	09/24	REVISED PER ADDENDUM 3	ESJ
Drawn by: J. MARCUM				
Checked by: E. ST. JOHN				

CDM Smith
ONE ALLEGHENY SQUARE
NOVA TOWER 1, SUITE 200
PITTSBURGH, PA 15212
TEL: (412) 201-5500

COMMONWEALTH OF PENNSYLVANIA REGISTERED PROFESSIONAL EDWARD J. ST JOHN 067012013

alcosan allegheny county sanitary authority

ARLETTA SCOTT WILLIAMS
EXECUTIVE DIRECTOR, ALCOSAN

3300 PREBLE AVE.
PITTSBURGH, PA 15233
(412) 766 - 4810

www.alcosan.org

ALLEGHENY COUNTY SANITARY AUTHORITY
WASTEWATER TREATMENT PLANT
SOLIDS THICKENING AND DEWATERING IMPROVEMENTS

400-M-124
DEWATERING BUILDING
THICKENING FEED TANK MIXER ROOM - PLANS

Contract: 1799
CAD File Name: 400-M-124.DGN
Date: 07 / 11 / 2024
Sheet: 200 of 440

KEYED NOTES

13 6" SANITARY LINE TO SERVE FLOOR DRAIN ON MEZZANINE ABOVE. REFER TO SHEET 400-P-103 FOR ADDITIONAL INFORMATION

14 6" SANITARY LINE TO FLOOR BELOW. REFER TO 400-P-101 FOR ADDITIONAL INFORMATION.

71 COORDINATE ELEVATION OF NEW DOMESTIC COLD WATER PIPE TO REMAIN CLEAR OF ANY SANITARY AND EXISTING CABLE TRAY IN SPACE.

72 4" SANITARY LINE SERVING WATER CLOSET ON THE FLOOR ABOVE.

73 2" SANITARY LINE SERVING FLOOR DRAIN ON THE FLOOR ABOVE.

74 4" SANITARY LINE DOWN TO FLOOR BELOW. REFER TO 400-P-101 FOR CONTINUATION.

79 CONNECT NEW 1-1/4" POTABLE DOMESTIC COLD WATER LINE TO EXISTING LINE SERVING EMERGENCY EYEWASH SHOWER BELOW THE CENTRIFUGE MEZZANINE. VERIFY EXACT LOCATION AND ELEVATION ON THE SITE.

80 1-1/4" POTABLE DOMESTIC COLD WATER LINE TO SERVE THE UTILITY SINK AND WATER HEATER ON THE FLOOR ABOVE.

118 PROVIDE DRAIN PAN BELOW THE SECTION OF SANITARY LINE WHICH IS ABOVE THE CABLE TRAY. THE SIZE OF DRAIN PAN PROVIDED SHALL BE MORE THAN THE SIZE OF THE SANITARY LINE. PROVIDE MOISTURE SENSORS ON THE DRAIN PAN.

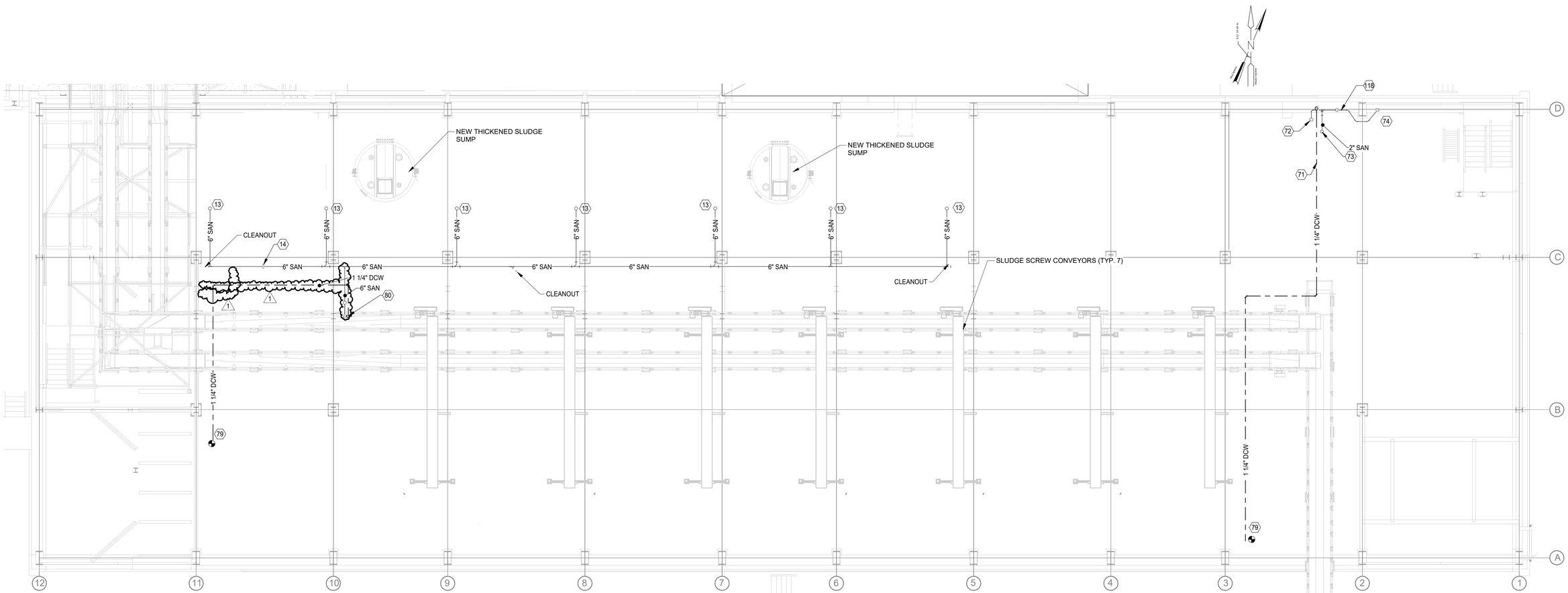

SECOND FLOOR NEW WORK

SCALE: 1/8" = 1'-0"

SCALE: 1/8" = 1'-0"
0 4' - 0" 8' - 0" 16' - 0"

Designed by: S.BHAT	REVISION			
	REV No.	DATE	DESCRIPTION	APPV
Drawn by: S.BHAT	1	9/06/24	REVISED PER ADDENDUM 3	
Checked by: J.APLING				

CDM Smith
ONE ALLEGHENY SQUARE
NOVA TOWER 1, SUITE 200
PITTSBURGH, PA 15212
TEL: (412) 201-5500

DLZ
ARCHITECTURE • ENGINEERING • PLANNING
SURVEYING • CONSTRUCTION SERVICES

COMMONWEALTH OF PENNSYLVANIA
REGISTERED PROFESSIONAL
JOSHUA R. APLING
ENGINEER
PE081653
09/06/2024

alcosan allegheny county sanitary authority

ARLETTA SCOTT WILLIAMS
EXECUTIVE DIRECTOR, ALCOSAN

3300 PREBLE AVE.
PITTSBURGH, PA 15233
(412) 766 - 4810

www.alcosan.org

ALLEGHENY COUNTY SANITARY AUTHORITY
WASTEWATER TREATMENT PLANT
SOLIDS THICKENING AND DEWATERING IMPROVEMENTS

400-P-102
DEWATERING BUILDING
SECOND FLOOR - NEW WORK

Contract: 1799
CAD File Name: 400-P-102.DWG
Date: 07/11/2024
Sheet: 232 OF 440

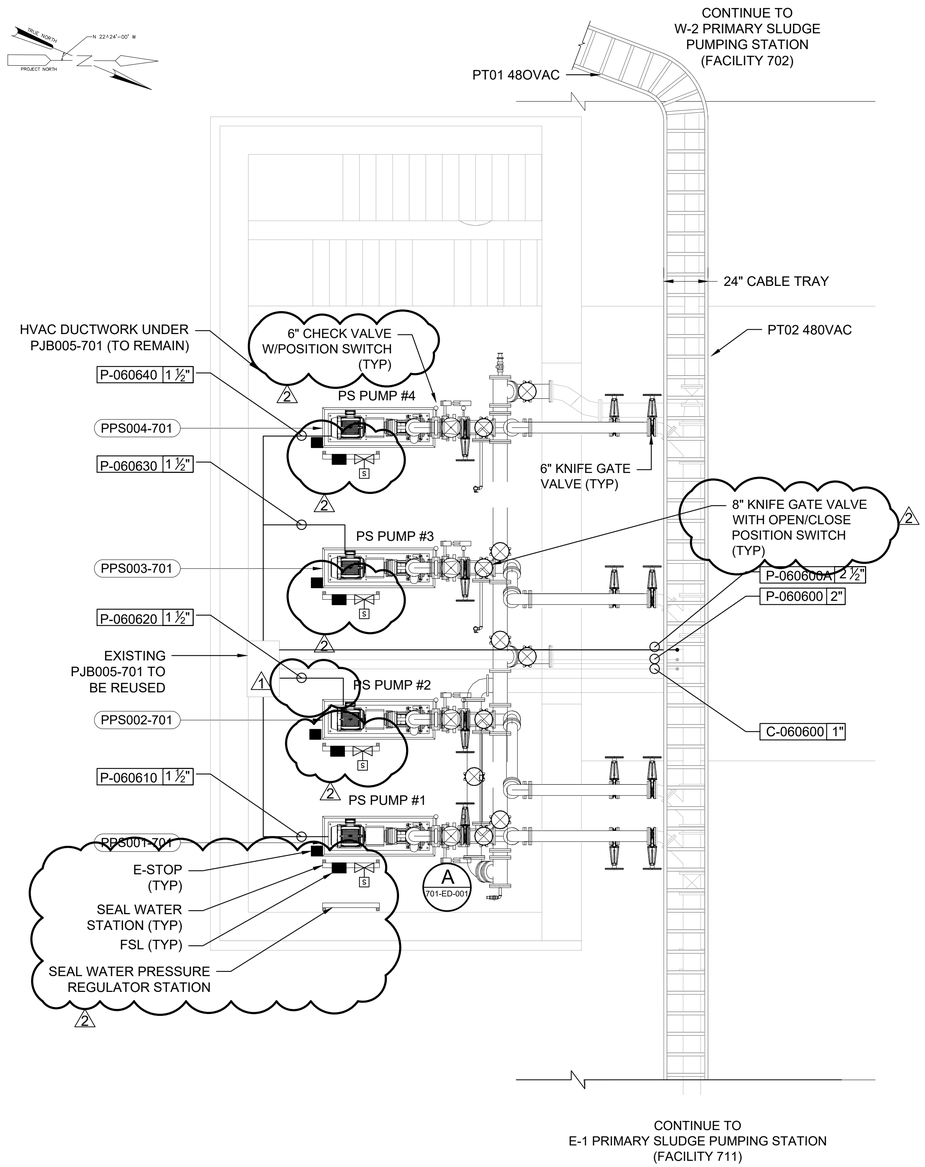

W-1 PRIMARY SLUDGE PUMPING STATION FACILTY

ELECTRICAL PLAN - NEW WORK

SCALE: 1/4" = 1'-0"

NOTES:

1. REFERENCE DWG G-100 FOR PROJECT AREA ORIENTATION PLAN.
2. E-STOP SHALL BE RED, MUSHROOM TYPE, WITH LOCKABLE MEANS.
3. ALL NEW CONDUITS SHALL BE RIGID ALUMINUM. (1)
4. ALL NEW PULL BOXES SHALL BE NEMA 4X TYPE 316 STAINLESS STEEL.
5. FIELD DEVICES LOCATION & ORIENTATION SHOWN HERE ARE TENTATIVE & FINAL LOCATIONS SHALL BE DETERMINED BY CONTRACTOR PER FIELD CONDITIONS DURING INSTALLATION BY PROVIDING THE NECESSARY WORKING CLEARANCES PER NEC 110.26.
6. REFER TO PROCESS MECHANICAL DRAWINGS FOR PUMPS KEY PLAN.
7. REFER TO SEQUENCE OF CONSTRUCTION SPECIFICATION AND MAKE SURE FOLLOW AS DIRECTED.
8. REFER TO PROCESS MECHANICAL DRAWINGS FOR SUCTION PLAN AND ASSOCIATED KNIFE GATE VALVE WITH OPEN/CLOSE POSITION SWITCH TAGS. (2)
9. REFER TO RISER DIAGRAMS AND CONDUIT & WIRE SCHEDULES FOR VALVE TAGS.
10. FROM EXISTING PULL BOX TO CABLE TRAYS, INSTALL ANY ADDITIONAL CONDUITS AS REQUIRED PER THE APPROVED CABLE SHOP DRAWINGS. (TYPICAL FOR ALL PUMP ROOM CABLE TRAY PLANS.)

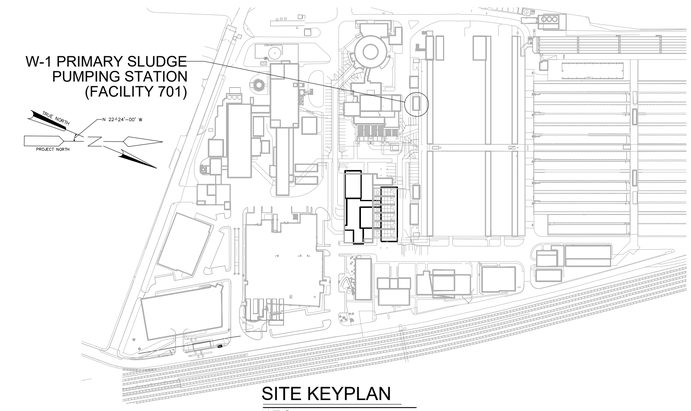

SITE KEYPLAN

N.T.S.

Designed by: S. VANGALA	REVISION			
	REV No.	DATE	DESCRIPTION	APPV
Drawn by: H. CAMACHO	1	8/28/24	REVISED PER ADDENDUM 2	
	2	9/13/24	REVISED PER ADDENDUM 3	
Checked by: R. VIJAYENDRAN				

CDM Smith
ONE ALLEGHENY SQUARE
NOVA TOWER 1, SUITE 200
PITTSBURGH, PA 15212
TEL: (412) 201-5500

METCO CONSULTING ENGINEERS

COMMONWEALTH OF PENNSYLVANIA REGISTERED PROFESSIONAL ENGINEER R. VIJAYENDRAN No. PE068332 07/12/2024

alcosan allegheny county sanitary authority

ARLETTA SCOTT WILLIAMS
EXECUTIVE DIRECTOR, ALCOSAN

3300 PREBLE AVE.
PITTSBURGH, PA 15233
(412) 766 - 4810

www.alcosan.org

ALLEGHENY COUNTY SANITARY AUTHORITY
WASTEWATER TREATMENT PLANT
SOLIDS THICKENING AND DEWATERING IMPROVEMENTS

701-ET-001
ELECTRICAL POWER PLAN
W-1 PRIMARY SLUDGE PUMPING STATION

Contract: 1799
CAD File Name: 701-ET-001.DWG
Date: 07 / 11 / 2024
Sheet: 271 of 440

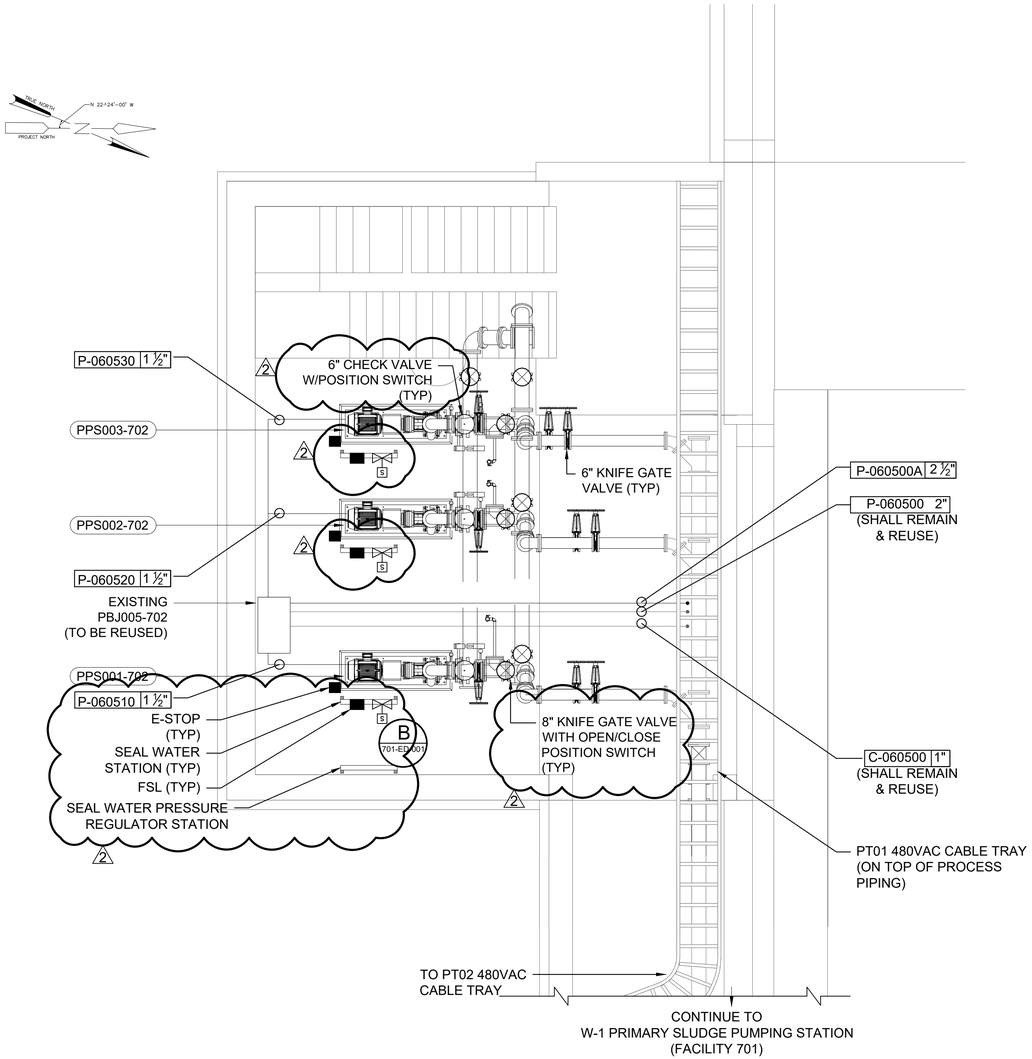

W-2 PRIMARY SLUDGE PUMPING STATION FACILTY - 702

ELECTRICAL POWER PLAN

SCALE: 1/4" = 1'-0"

NOTES:

1. REFERENCE DWG G-100 FOR PROJECT AREA ORIENTATION PLAN.
2. E-STOP SHALL BE RED, MUSHROOM TYPE, WITH LOCKABLE MEANS.
3. ALL NEW CONDUITS SHALL BE RIGID ALUMINUM. (1)
4. ALL NEW PULL BOXES SHALL BE NEMA 4X TYPE 316 STAINLESS STEEL.
5. FIELD DEVICES LOCATION & ORIENTATION SHOWN HERE ARE TENTATIVE & FINAL LOCATIONS SHALL BE DETERMINED BY CONTRACTOR PER FIELD CONDITIONS DURING INSTALLATION BY PROVIDING THE NECESSARY WORKING CLEARANCES PER NEC 110.26
6. REFER TO PROCESS MECHANICAL DRAWINGS FOR PUMPS KEY PLAN.
7. REFER TO SHEET 701-ED-001 FOR RISER DIAGRAM AND CONDUIT TAGS.
8. REFER TO PROCESS MECHANICAL DRAWINGS FOR SUCTION PLAN AND ASSOCIATED KNIFE GATE VALVE WITH OPEN/CLOSE POSITION SWITCH TAGS. (2)
9. REFER TO RISER DIAGRAMS AND CONDUIT & WIRE SCHEDULES FOR VALVE TAGS.
10. FROM EXISTING PULL BOX TO CABLE TRAYS, INSTALL ANY ADDITIONAL CONDUITS AS REQUIRED PER THE APPROVED CABLE SHOP DRAWINGS. (TYPICAL FOR ALL PUMP ROOM CABLE TRAY PLANS.)

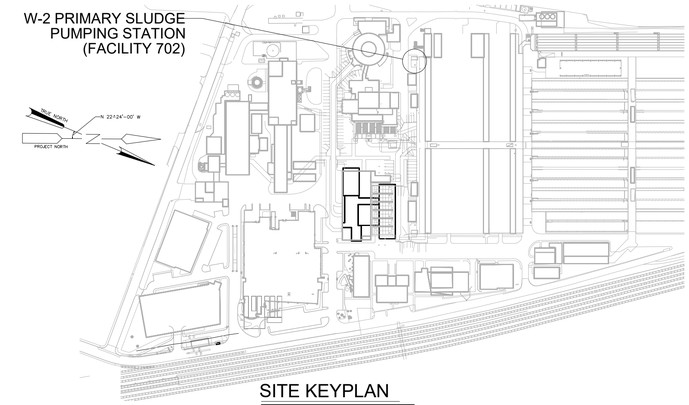

SITE KEYPLAN

N.T.S.

Designed by: S. VANGALA	REV No.	DATE	DESCRIPTION	APPV
Drawn by: H. CAMACHO	1	8/28/24	REVISED PER ADDENDUM 2	
Checked by: R. VIJAYENDRAN	2	9/13/24	REVISED PER ADDENDUM 3	

REVISION

CDM Smith
ONE ALLEGHENY SQUARE
NOVA TOWER 1, SUITE 200
PITTSBURGH, PA 15212
TEL: (412) 201-5500

METCO CONSULTING ENGINEERS

COMMONWEALTH OF PENNSYLVANIA REGISTERED PROFESSIONAL ENGINEER RAJARAM VIJAYENDRAN No. PE085332 07/12/2024

alcosan allegheny county sanitary authority

ARLETTA SCOTT WILLIAMS
EXECUTIVE DIRECTOR, ALCOSAN

3300 PREBLE AVE.
PITTSBURGH, PA 15233
(412) 766 - 4810

www.alcosan.org

ALLEGHENY COUNTY SANITARY AUTHORITY
WASTEWATER TREATMENT PLANT
SOLIDS THICKENING AND DEWATERING IMPROVEMENTS

702-ET-001
ELECTRICAL POWER PLAN
W2 PRIMARY SLUDGE PUMPING STATION

Contract: 1799
CAD File Name: 702-ET-001.DWG
Date: 07 / 11 / 2024
Sheet: 272 of 440

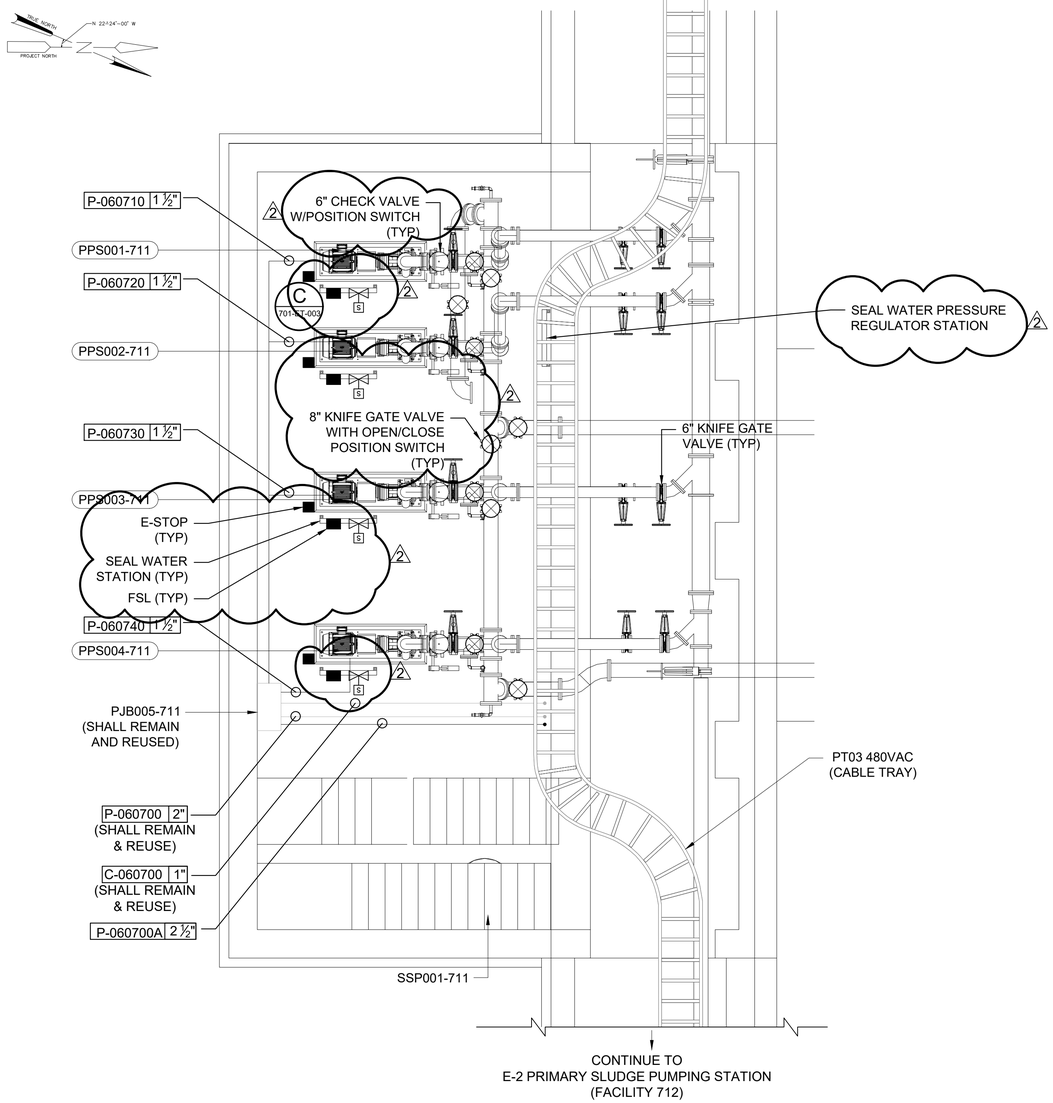

E-1 PRIMARY SLUDGE PUMPING STATION FACILTY - 711

ELECTRICAL POWER PLAN

SCALE: 1/4" = 1'-0"

NOTES:

1. REFERENCE DWG G-100 FOR PROJECT AREA ORIENTATION PLAN.
2. E-STOP SHALL BE RED, MUSHROOM TYPE, WITH LOCKABLE MEANS
3. ALL NEW CONDUITS SHALL BE RIGID ALUMINUM. (1)
4. ALL NEW PULL BOXES SHALL BE NEMA 4X TYPE 316 STAINLESS STEEL.
5. FIELD DEVICES LOCATION & ORIENTATION SHOWN HERE ARE TENTATIVE & FINAL LOCATIONS SHALL BE DETERMINED BY CONTRACTOR PER FIELD CONDITIONS DURING INSTALLATION BY PROVIDING THE NECESSARY WORKING CLEARANCES PER NEC 110.26
6. REFER TO PROCESS MECHANICAL DRAWINGS FOR PUMPS KEY PLAN.
7. REFER TO PROCESS MECHANICAL DRAWINGS FOR SUCTION PLAN AND ASSOCIATED KNIFE GATE VALVE WITH OPEN/CLOSE POSITION SWITCH TAGS. (2)
8. REFER TO RISER DIAGRAMS AND CONDUIT & WIRE SCHEDULES FOR VALVE TAGS.
9. FROM EXISTING PULL BOX TO CABLE TRAYS, INSTALL ANY ADDITIONAL CONDUITS AS REQUIRED PER THE APPROVED CABLE SHOP DRAWINGS. (TYPICAL FOR ALL PUMP ROOM CABLE TRAY PLANS.)

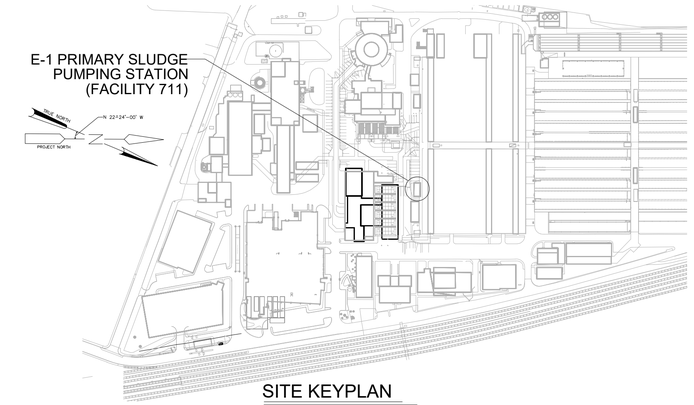

SITE KEYPLAN

N.T.S.

Designed by: S. VANGALA	REV No.	DATE	DESCRIPTION	APPV
Drawn by: H. CAMACHO	1	8/28/24	REVISED PER ADDENDUM 2	
Checked by: R. VIJAYENDRAN	2	9/13/24	REVISED PER ADDENDUM 3	

REVISION

CDM Smith
ONE ALLEGHENY SQUARE
NOVA TOWER 1, SUITE 200
PITTSBURGH, PA 15212
TEL: (412) 201-5500

METCO CONSULTING ENGINEERS

COMMONWEALTH OF PENNSYLVANIA REGISTERED PROFESSIONAL ENGINEER R. VIJAYENDRAN No. PE085320 07/12/2024

alcosan allegheny county sanitary authority

ARLETTA SCOTT WILLIAMS
EXECUTIVE DIRECTOR, ALCOSAN

3300 PREBLE AVE.
PITTSBURGH, PA 15233
(412) 766 - 4810

www.alcosan.org

ALLEGHENY COUNTY SANITARY AUTHORITY
WASTEWATER TREATMENT PLANT
SOLIDS THICKENING AND DEWATERING IMPROVEMENTS

711-ET-001
ELECTRICAL - POWER PLAN
E-1 PRIMARY SLUDGE PUMPING STATION

Contract: 1799
CAD File Name: 711-ET-001.DWG
Date: 07 / 11 / 2024
Sheet: 274 of 440

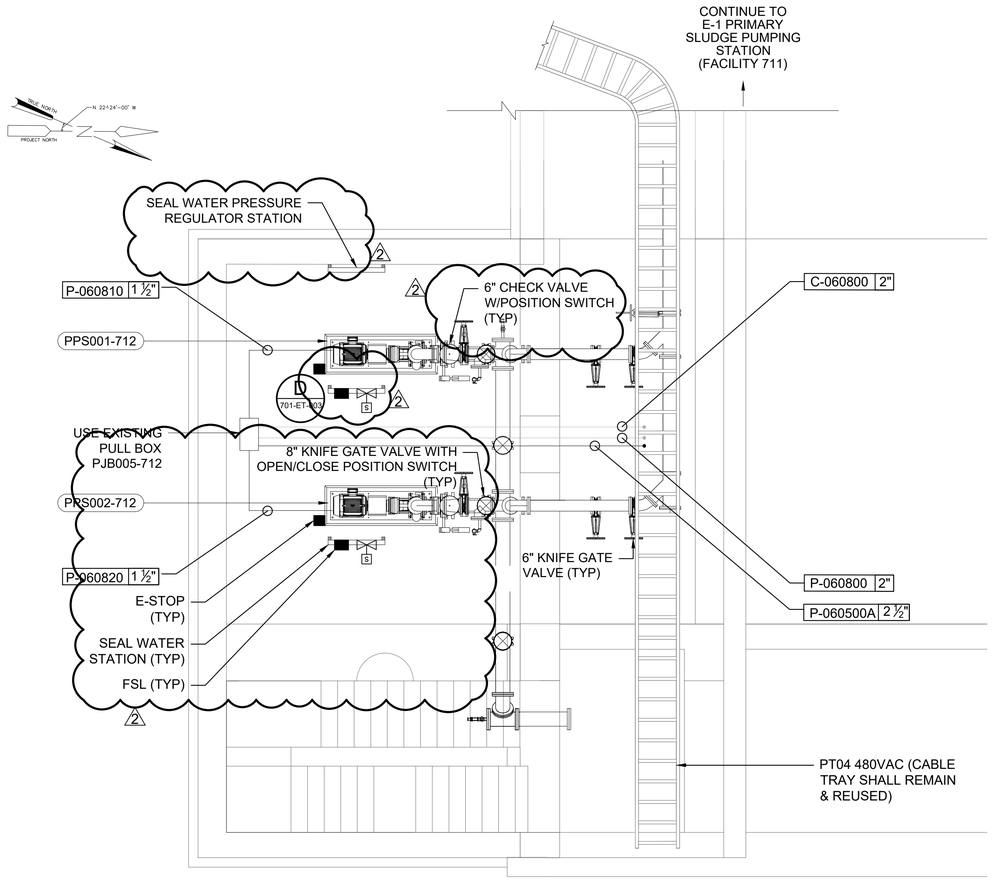

E-2 PRIMARY SLUDGE PUMPING STATION FACILTY - 712

ELECTRICAL POWER PLAN

SCALE: 1/4" = 1'-0"

NOTES:

1. REFERENCE DWG G-100 FOR PROJECT AREA ORIENTATION PLAN.
2. E-STOP SHALL BE RED, MUSHROOM TYPE, WITH LOCKABLE MEANS.
3. ALL NEW CONDUITS SHALL BE RIGID ALUMIUM. (1)
4. ALL NEW PULL BOXES SHALL BE NEMA 4X TYPE 316 STAINLESS STEEL.
5. FIELD DEVICES LOCATION & ORIENTATION SHOWN HERE ARE TENTATIVE & FINAL LOCATIONS SHALL BE DETERMINED BY CONTRACTOR PER FIELD CONDITIONS DURING INSTALLATION BY PROVIDING THE NECESSARY WORKING CLEARANCES PER NEC 110.26
6. REFER TO PROCESS MECHANICAL DRAWINGS FOR PUMPS KEY PLAN
7. REFER TO PROCESS MECHANICAL DRAWINGS FOR SUCTION PLAN AND ASSOCIATED KNIFE GATE VALVE WITH OPEN/CLOSE POSITION SWITCH TAGS. (2)
8. REFER TO RISER DIAGRAMS AND CONDUIT & WIRE SCHEDULES FOR VALVE TAGS.
9. FROM EXISTING PULL BOX TO CABLE TRAYS, INSTALL ANY ADDITIONAL CONDUITS AS REQUIRED PER THE APPROVED CABLE SHOP DRAWINGS. (TYPICAL FOR ALL PUMP ROOM CABLE TRAY PLANS.)

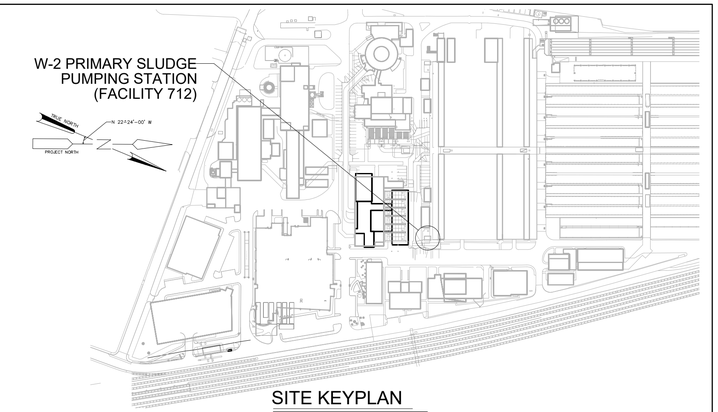

SITE KEYPLAN

N.T.S.

Designed by: S. VANGALA	REVISION			
	REV No.	DATE	DESCRIPTION	APPV
Drawn by: H. CAMACHO	1	8/28/24	REVISED PER ADDENDUM 2	
	2	9/13/24	REVISED PER ADDENDUM 3	
Checked by: R. VIJAYENDRAN				

CDM Smith
ONE ALLEGHENY SQUARE
NOVA TOWER 1, SUITE 200
PITTSBURGH, PA 15212
TEL: (412) 201-5500

METCO CONSULTING ENGINEERS

COMMONWEALTH OF PENNSYLVANIA REGISTERED PROFESSIONAL ENGINEER R. VIJAYENDRAN No. PE085320 07/12/2024

alcosan allegheny county sanitary authority

ARLETTA SCOTT WILLIAMS
EXECUTIVE DIRECTOR, ALCOSAN

3300 PREBLE AVE.
PITTSBURGH, PA 15233
(412) 766 - 4810

www.alcosan.org

ALLEGHENY COUNTY SANITARY AUTHORITY
WASTEWATER TREATMENT PLANT
SOLIDS THICKENING AND DEWATERING IMPROVEMENTS

712-ET-001
ELECTRICAL - PROPOSED
E2 PRIMARY SLUDGE PUMPING STATION

Contract: 1799
CAD File Name: 712-ET-001.DWG
Date: 07 / 11 / 2024
Sheet: 275 of 440

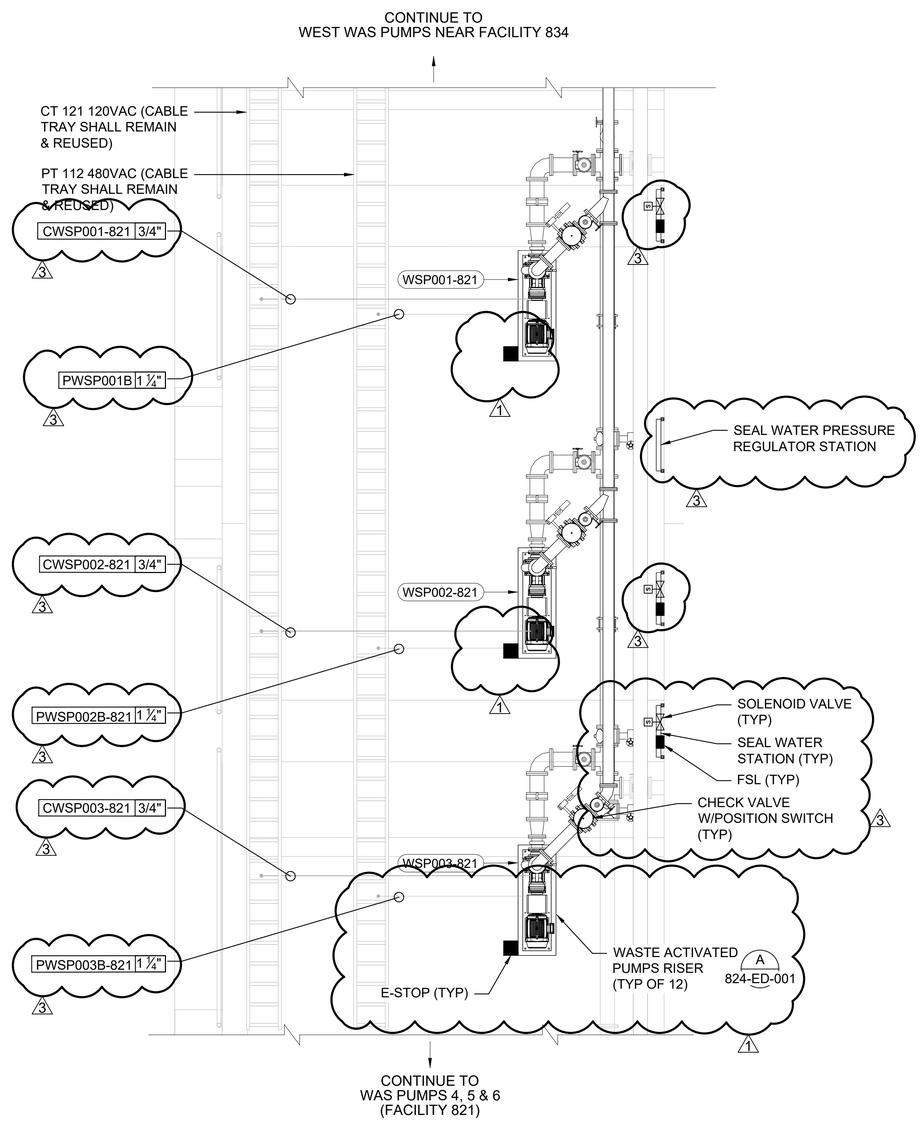

EAST WAS PUMPS FACILITY 821 NEAR EAST AERATION BASINS ELECTRICAL ROOM (FACILITY 824)

ELECTRICAL POWER PLAN I

SCALE: 1/4" = 1'-0"

NOTES:

1. REFERENCE DWG G-100 FOR PROJECT AREA ORIENTATION PLAN.
2. E-STOP SHALL BE RED, MUSHROOM TYPE, WITH LOCKABLE MEANS.
3. ALL NEW CONDUITS SHALL BE RIGID ALUMINUM. (2)
4. ALL NEW PULL BOXES SHALL BE NEMA 4X TYPE 316 STAINLESS STEEL.
5. DISCONNECT LOCATION & ORIENTATION SHOWN HERE ARE TENTATIVE & FINAL LOCATIONS SHALL BE DETERMINED BY CONTRACTOR PER FIELD CONDITIONS DURING INSTALLATION BY PROVIDING THE NECESSARY WORKING CLEARANCES PER NEC 110.26
6. REFER TO PROCESS MECHANICAL DRAWINGS FOR PUMPS KEY PLAN.

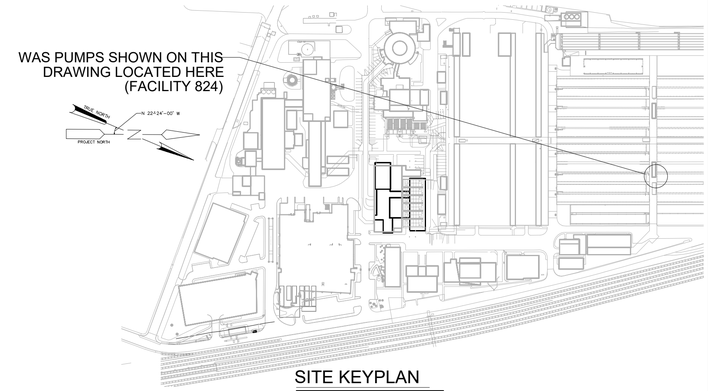

SITE KEYPLAN

N.T.S.

Designed by: S. VANGALA	REVISION			
	REV No.	DATE	DESCRIPTION	APPV
Drawn by: H. CAMACHO	1	8/13/24	REVISED PER ADDENDUM 1	
	2	8/28/24	REVISED PER ADDENDUM 2	
Checked by: R. VIJAYENDRAN	3	9/13/24	REVISED PER ADDENDUM 3	

CDM Smith
ONE ALLEGHENY SQUARE
NOVA TOWER 1, SUITE 200
PITTSBURGH, PA 15212
TEL: (412) 201-5500

METCO CONSULTING ENGINEERS

COMMONWEALTH OF PENNSYLVANIA REGISTERED PROFESSIONAL ENGINEER R. VIJAYENDRAN No. PE088320 09/12/2024

alcosan allegheny county sanitary authority
ARLETTA SCOTT WILLIAMS
EXECUTIVE DIRECTOR, ALCOSAN
3300 PREBLE AVE.
PITTSBURGH, PA 15233
(412) 766 - 4810
www.alcosan.org

ALLEGHENY COUNTY SANITARY AUTHORITY
WASTEWATER TREATMENT PLANT
SOLIDS THICKENING AND DEWATERING IMPROVEMENTS

821-ET-001
ELECTRICAL POWER PLAN- EAST WASTE ACTIVATED TUNNEL (821) PLAN-I

Contract: 1799
CAD File Name: 821-ET-001.DWG
Date: 07 / 11 / 2024
Sheet: 277 of 440

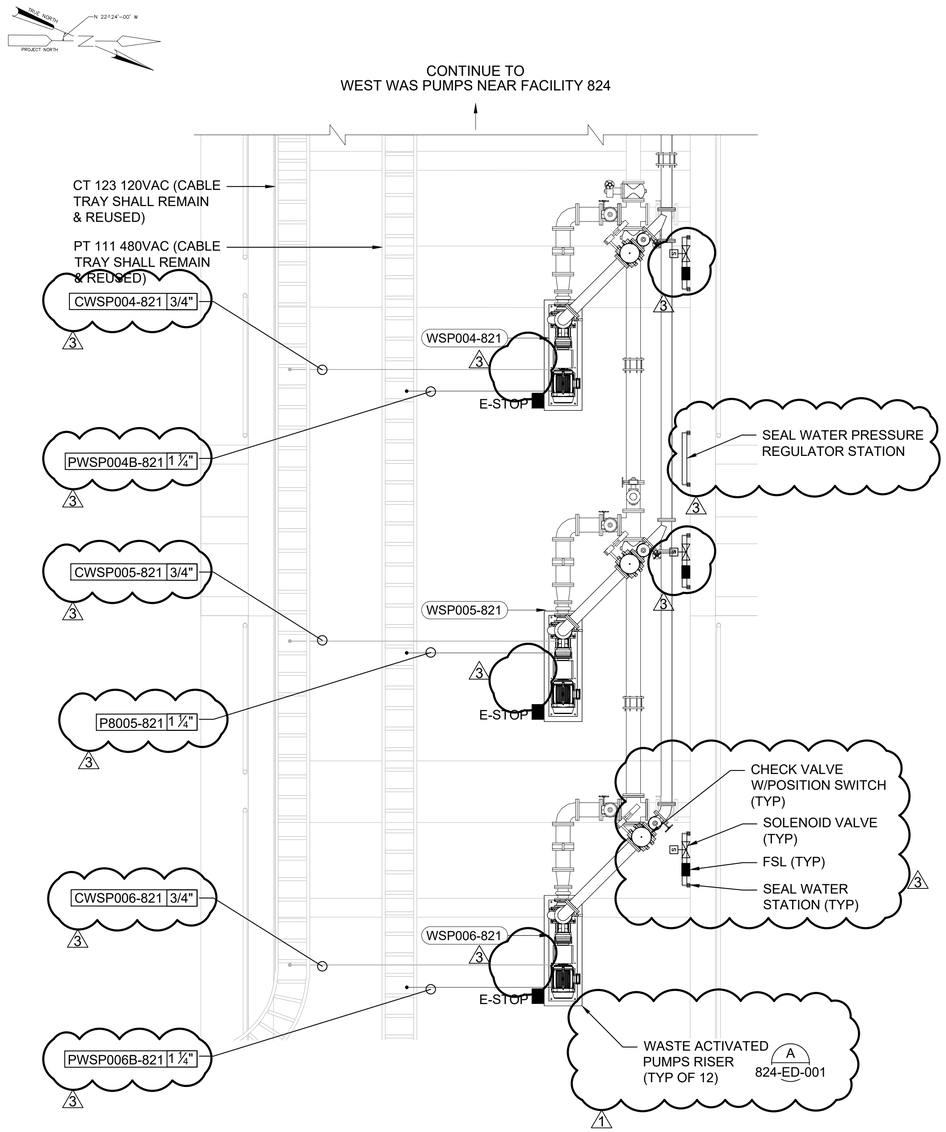

EAST WAS PUMPS NEAR STAIRWELL BUILDING 1 (FACILTY 823)

ELECTRICAL POWER PLAN II

SCALE: 1/4" = 1'-0"

NOTES:

1. REFERENCE DWG G-100 FOR PROJECT AREA ORIENTATION PLAN.
2. E-STOP SHALL BE RED, MUSHROOM TYPE, WITH LOCKABLE MEANS.
3. ALL NEW CONDUITS SHALL BE RIGID ALUMINUM.
4. ALL NEW PULL BOXES SHALL BE NEMA 4X TYPE 316 STAINLESS STEEL.
5. DISCONNECT LOCATION & ORIENTATION SHOWN HERE ARE TENTATIVE & FINAL LOCATIONS SHALL BE DETERMINED BY CONTRACTOR PER FIELD CONDITIONS DURING INSTALLATION BY PROVIDING THE NECESSARY WORKING CLEARANCES PER NEC 110.26
6. REFER TO PROCESS MECHANICAL DRAWINGS FOR PUMPS KEY PLAN.

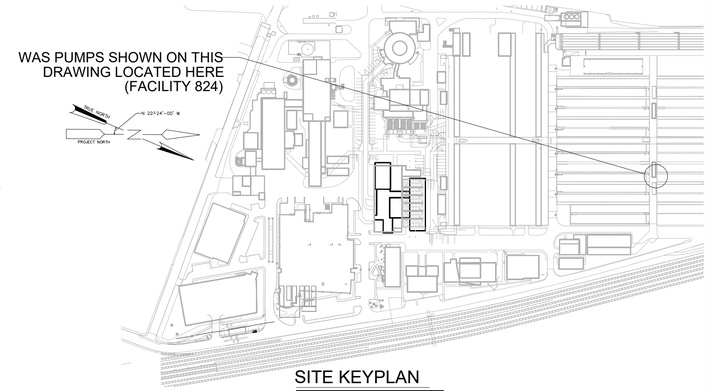

SITE KEYPLAN

N.T.S.

Designed by: S. VANGALA	REVISION			
	REV No.	DATE	DESCRIPTION	APPV
Drawn by: H. CAMACHO	1	8/13/24	REVISED PER ADDENDUM 1	
	2	8/28/24	REVISED PER ADDENDUM 2	
Checked by: R. VIJAYENDRAN	3	9/13/24	REVISED PER ADDENDUM 3	

CDM Smith
ONE ALLEGHENY SQUARE
NOVA TOWER 1, SUITE 200
PITTSBURGH, PA 15212
TEL: (412) 201-5500

METCO CONSULTING ENGINEERS

COMMONWEALTH OF PENNSYLVANIA REGISTERED PROFESSIONAL ENGINEER RAJARAM VIJAYENDRAN No. PE085320 07/12/2024

alcosan allegheny county sanitary authority
ARLETTA SCOTT WILLIAMS
EXECUTIVE DIRECTOR, ALCOSAN
3300 PREBLE AVE.
PITTSBURGH, PA 15233
(412) 766 - 4810
www.alcosan.org

ALLEGHENY COUNTY SANITARY AUTHORITY
WASTEWATER TREATMENT PLANT
SOLIDS THICKENING AND DEWATERING IMPROVEMENTS

821-ET-002
ELECTRICAL POWER PLAN- EAST WASTE ACTIVATED TUNNEL (821) PLAN-II

Contract: 1799
CAD File Name: 821-ET-002.DWG
Date: 07 / 11 / 2024
Sheet: 278 of 440

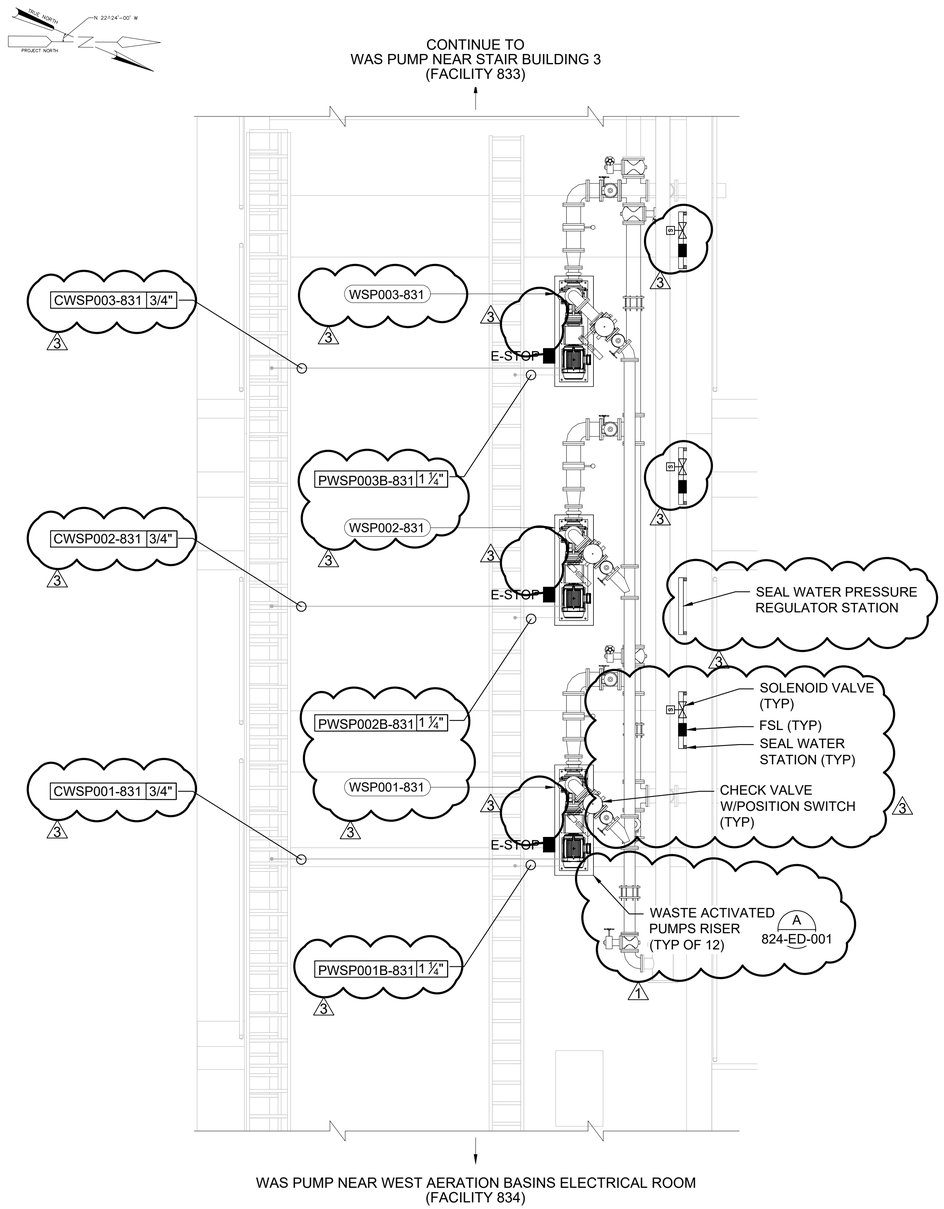

WEST WAS PUMPS NEAR FACILTY 834

ELECTRICAL POWER PLAN I

SCALE: 1/4" = 1'-0"

NOTES:

1. REFERENCE DWG G-100 FOR PROJECT AREA ORIENTATION PLAN.
2. E-STOP SHALL BE RED, MUSHROOM TYPE, WITH LOCKABLE MEANS.
3. ALL NEW CONDUITS SHALL BE RIGID ALUMINUM.
4. ALL NEW PULL BOXES SHALL BE NEMA 4X TYPE 316 STAINLESS STEEL.
5. DISCONNECT LOCATION & ORIENTATION SHOWN HERE ARE TENTATIVE & FINAL LOCATIONS SHALL BE DETERMINED BY CONTRACTOR PER FIELD CONDITIONS DURING INSTALLATION BY PROVIDING THE NECESSARY WORKING CLEARANCES PER NEC 110.26.
6. REFER TO PROCESS MECHANICAL DRAWINGS FOR PUMPS KEY PLAN.

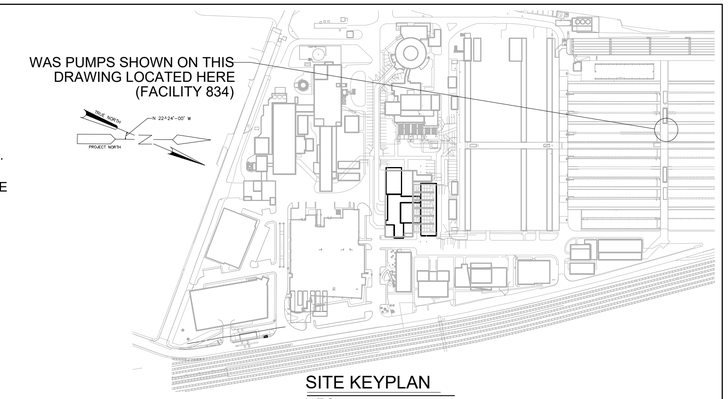

SITE KEYPLAN

N.T.S.

Designed by: S. VANGALA	REVISION			
	REV No.	DATE	DESCRIPTION	APPV
Drawn by: H. CAMACHO	1	8/13/24	REVISED PER ADDENDUM 1	
	2	8/28/24	REVISED PER ADDENDUM 2	
Checked by: R. VIJAYENDRAN	3	9/13/24	REVISED PER ADDENDUM 3	

CDM Smith
ONE ALLEGHENY SQUARE
NOVA TOWER 1, SUITE 200
PITTSBURGH, PA 15212
TEL: (412) 201-5500

METCO CONSULTING ENGINEERS

COMMONWEALTH OF PENNSYLVANIA
REGISTERED PROFESSIONAL ENGINEER
RAJARAM VIJAYENDRAN
No. PE085320
07/12/2024

alcosan allegheny county sanitary authority

ARLETTA SCOTT WILLIAMS
EXECUTIVE DIRECTOR, ALCOSAN

3300 PREBLE AVE.
PITTSBURGH, PA 15233
(412) 766 - 4810

www.alcosan.org

ALLEGHENY COUNTY SANITARY AUTHORITY
WASTEWATER TREATMENT PLANT
SOLIDS THICKENING AND DEWATERING IMPROVEMENTS

831-ET-001
ELECTRICAL POWER PLAN- WEST WASTE ACTIVATED TUNNEL (831) PLAN-I

Contract: 1799
CAD File Name: 831ET001.dwg
Date: 07 / 11 / 2024
Sheet: 280 of 440

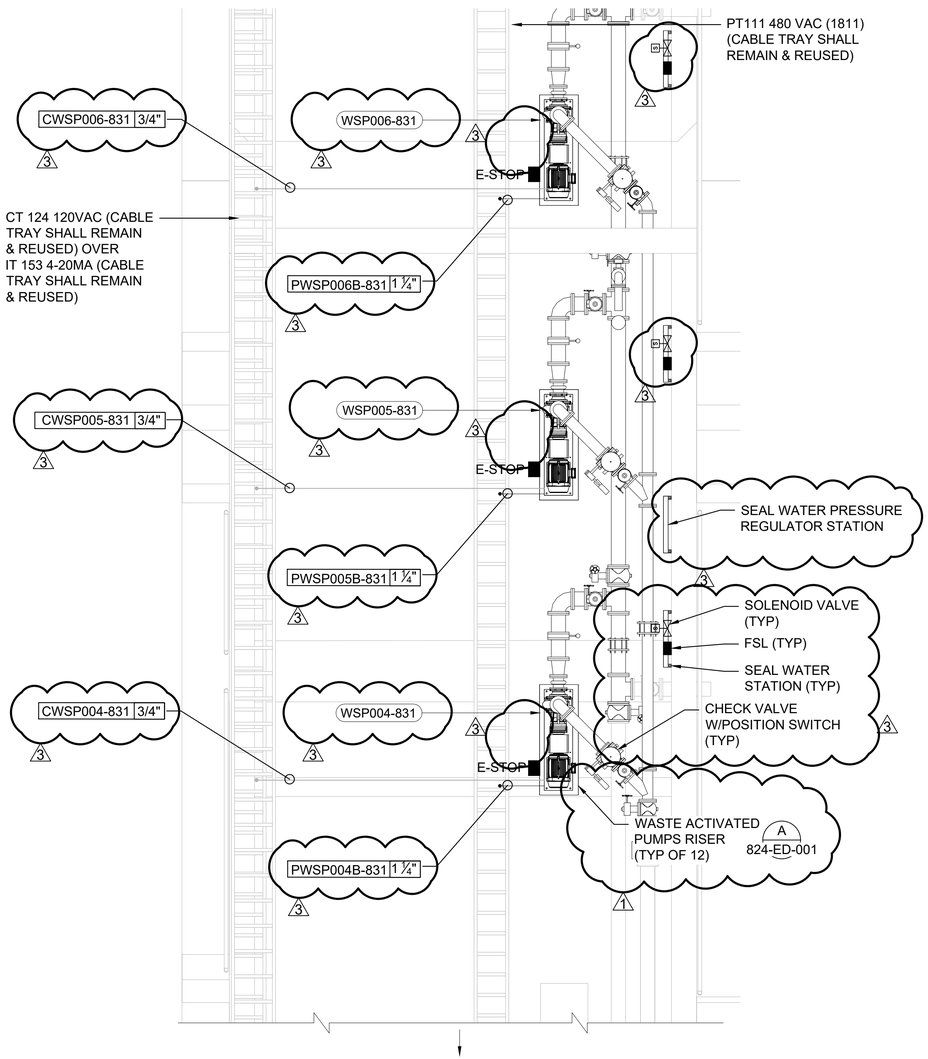

WEST WAS PUMPS FACILITY 831 NEAR FACILITY 834

ELECTRICAL POWER PLAN II

SCALE: 1/4" = 1'-0"

NOTES:

1. REFERENCE DWG G-100 FOR PROJECT AREA ORIENTATION PLAN.
2. E-STOP SHALL BE RED, MUSHROOM TYPE, WITH LOCKABLE MEANS.
3. ALL NEW CONDUITS SHALL BE RIGID ALUMINUM. (2)
4. ALL NEW PULL BOXES SHALL BE NEMA 4X TYPE 316 STAINLESS STEEL.
5. DISCONNECT LOCATION & ORIENTATION SHOWN HERE ARE TENTATIVE & FINAL LOCATIONS SHALL BE DETERMINED BY CONTRACTOR PER FIELD CONDITIONS DURING INSTALLATION BY PROVIDING THE NECESSARY WORKING CLEARANCES PER NEC 110.26
6. REFER TO PROCESS MECHANICAL DRAWINGS FOR PUMPS KEY PLAN.

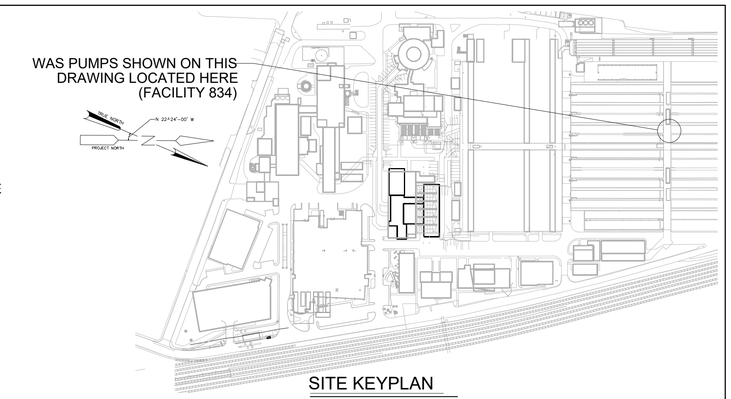

SITE KEYPLAN

N.T.S.

Designed by: S. VANGALA	REV No.	DATE	DESCRIPTION	APPV
Drawn by: H. CAMACHO	1	8/13/24	REVISED PER ADDENDUM 1	
Checked by: R. VIJAYENDRAN	2	8/28/24	REVISED PER ADDENDUM 2	
	3	9/13/24	REVISED PER ADDENDUM 3	

REVISION

CDM Smith
ONE ALLEGHENY SQUARE
NOVA TOWER 1, SUITE 200
PITTSBURGH, PA 15212
TEL: (412) 201-5500

METCO CONSULTING ENGINEERS

COMMONWEALTH OF PENNSYLVANIA REGISTERED PROFESSIONAL ENGINEER RAJARAM VIJAYENDRAN No. PE085332 07/12/2024

alcosan allegheny county sanitary authority

ARLETTA SCOTT WILLIAMS
EXECUTIVE DIRECTOR, ALCOSAN

3300 PREBLE AVE.
PITTSBURGH, PA 15233
(412) 766 - 4810

www.alcosan.org

ALLEGHENY COUNTY SANITARY AUTHORITY
WASTEWATER TREATMENT PLANT
SOLIDS THICKENING AND DEWATERING IMPROVEMENTS

831-ET-002
ELECTRICAL POWER PLAN- WEST WASTE ACTIVATED TUNNEL (831) PLAN-II

Contract: 1799
CAD File Name: 831-ET-002.DWG
Date: 07 / 11 / 2024
Sheet: 281 of 440

TAG NUMBERS REF. SHOWN PPS001-701	TAG NUMBERS REF. SHOWN PPS002-701	TAG NUMBERS REF. SHOWN PPS003-701	TAG NUMBERS REF. SHOWN PPS004-701	TAG NUMBERS REF. SHOWN PPS001-702	TAG NUMBERS REF. SHOWN PPS002-702	TAG NUMBERS REF. SHOWN PPS003-702	TAG NUMBERS REF. SHOWN PPS001-711	TAG NUMBERS REF. SHOWN PPS002-711	TAG NUMBERS REF. SHOWN PPS003-711	TAG NUMBERS REF. SHOWN PPS004-711	TAG NUMBERS REF. SHOWN PPS001-712	TAG NUMBERS REF. SHOWN PPS002-712
PPS001-701CS	PPS002-701CS	PPS003-703CS	PPS001-704CS	PPS001-702CS	PPS002-702CS	PPS003-702CS	PPS001-711CS	PPS002-711CS	PPS003-711CS	PPS004-711CS	PPS001-712CS	PPS002-712CS
P060610	P060620	P060630	P060640	P060510	P060520	P060530	P060710	P060720	P060730	P060740	P060810	P060820
P060611	P060621	P060631	P060641	P060511	P060521	P060531	P060711	P060721	P060731	P060741	P060811	P060821
P060612	P060622	P060632	P060642	P060512	P060522	P060532	P060712	P060722	P060732	P060742	P060812	P060822
P060613	P060623	P060633	P060643	P060513	P060523	P060533	P060713	P060723	P060733	P060743	P060813	P060823
P060614	P060624	P060634	P060644	P060514	P060524	P060534	P060714	P060724	P060734	P060744	P060814	P060824
PT01-480VAC	PT01-480VAC	PT02-480VAC	PT02-480VAC	PT01-480VAC	PT01-480VAC	PT01-480VAC	PT03-480VAC	PT03-480VAC	PT03-480VAC	PT03-480VAC	PT04-480VAC	PT04-480VAC
PJB001-701	PJB002-701	PJB003-701	PJB004-701	PJB001-702	PJB002-702	PJB003-702	PJB001-711	PJB002-711	PJB003-711	PJB004-711	PJB001-712	PJB002-712
C60600	C60600	C60600	C60600	C060500	C060500	C060500	C060700	C060700	C060700	C060700	C060800	C060800
CSV001-701	CSV-002-701	CSV003-701	CSV004-701	CSV001-702	CSV002-702	CSV003-702	CSV001-711	CSV002-711	CSV003-711	CSV004-711	CSV001-712	CSV002-712
KGV001-701	KGV002-701	KGV005-701	KGV006-701	KGV001-702	KGV004-702	KGV002-702	KGV001-711	KGV002-711	KGV009-711	KGV003-711	KGV001-712	KGV002-712
KGV007-701	KGV004-701	KGV009-701	KGV003-701	KGV005-702	KGV006-702	KGV007-702	KGV007-711	KGV005-711	KGV004-711	KGV006-711	KGV003-712	KGV004-712
	KGV008-701		KGV010-701		KGV003-703			KGV008-711		KGV010-711		

NOTE:

1. REFER TO SHEET 00-E-004 FOR CONDUIT AND WIRE SCHEDULE
2. REFER TO 702-ET-001, 701-ET-001, 711-ET-001 & 712-ET-001 SHEETS FOR JUNCTION BOX AND CABLE TRAY LOCATIONS.
3. CONDUITS FOR MOTOR TERMINAL BOXES SHALL BE FLEXIBLE METAL CONDUITS. REFER TO CONDUIT SPECIFICATIONS FOR ADDITIONAL DETAILS.
4. REFER TO I&C SHEETS FOR SOLENOID AND FSL TAG NUMBERS. TYPICAL DESCRIPTION SHOWN IN ELECTRICAL PLAN.

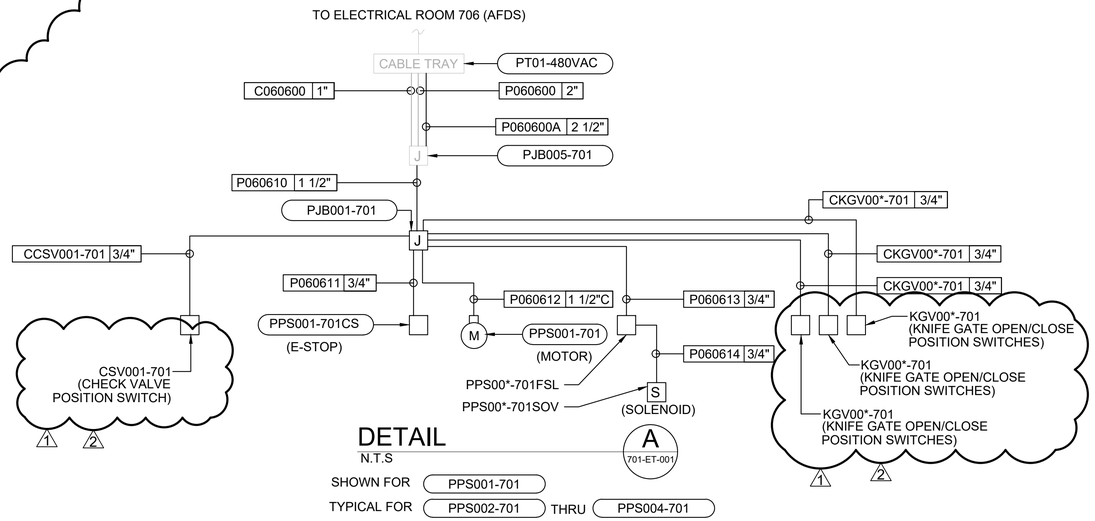

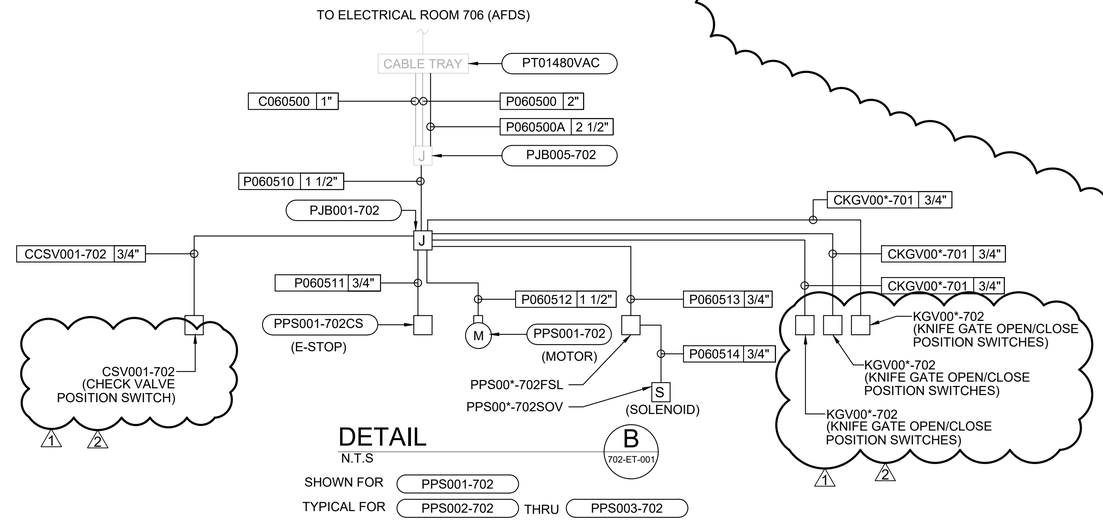

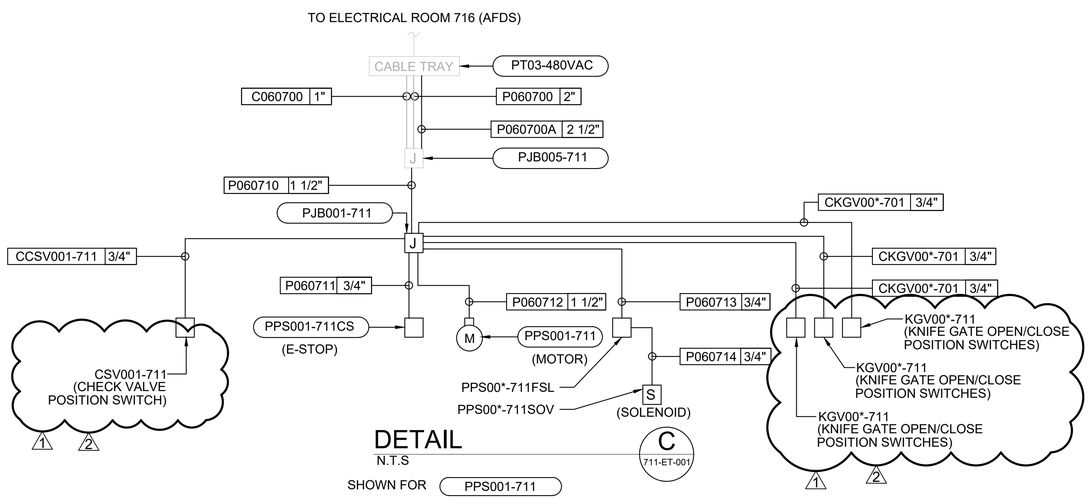

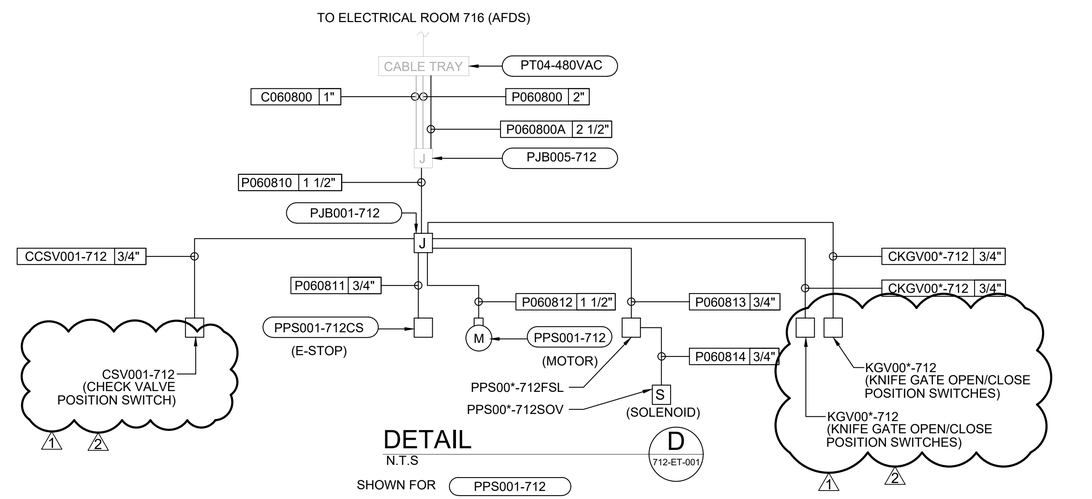

Designed by: S. VANGALA	REVISION			
	REV No.	DATE	DESCRIPTION	APPV
Drawn by: H. CAMACHO	1	8/13/24	REVISED PER ADDENDUM 1	
	2	9/13/24	REVISED PER ADDENDUM 3	
Checked by: R. VIJAYENDRAN				

CDM Smith
ONE ALLEGHENY SQUARE
NOVA TOWER 1, SUITE 200
PITTSBURGH, PA 15212
TEL: (412) 201-5500

METCO CONSULTING ENGINEERS

COMMONWEALTH OF PENNSYLVANIA REGISTERED PROFESSIONAL ENGINEER RAJARAM VIJAYENDRAN No. PE088332 07/12/2024

alcosan allegheny county sanitary authority
ARLETTA SCOTT WILLIAMS
EXECUTIVE DIRECTOR, ALCOSAN
3300 PREBLE AVE.
PITTSBURGH, PA 15233
(412) 766 - 4810
www.alcosan.org

ALLEGHENY COUNTY SANITARY AUTHORITY
WASTEWATER TREATMENT PLANT
SOLIDS THICKENING AND DEWATERING IMPROVEMENTS

701-ED-001
ELECTRICAL
PRIMARY SLUDGE PUMPS RISER DIAGRAM

Contract: 1799
CAD File Name: 701ED001.dwg
Date: 07 / 11 / 2024
Sheet: 283 of 440

NOTES:

1. REFER TO SHEETS 706-ESL-0018, 706-ESL-002 FOR MCC BUCKETS INFORMATION.
2. REFER TO CONDUIT WIRE & CABLE SCHEDULE FOR WIRE SIZES.

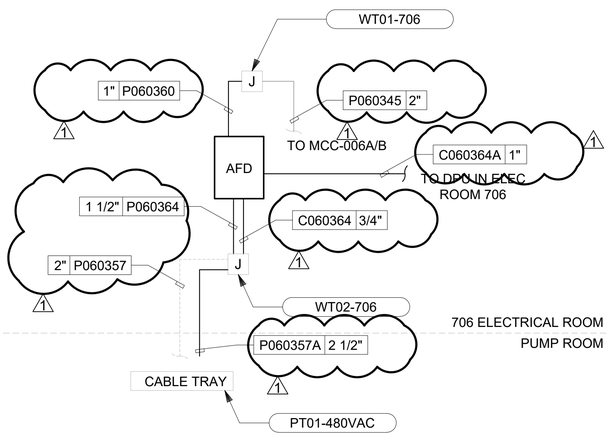

DETAIL A

1" = 1'-0"

706-ED-001

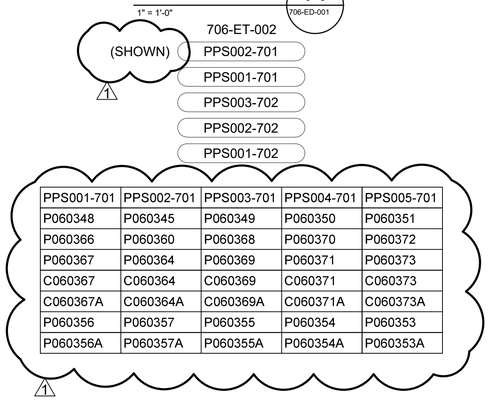

PPS001-701	PPS002-701	PPS003-701	PPS004-701	PPS005-701
P060348	P060345	P060349	P060350	P060351
P060366	P060360	P060368	P060370	P060372
P060367	P060364	P060369	P060371	P060373
C060367	C060364	C060369	C060371	C060373
C060367A	C060364A	C060369A	C060371A	C060373A
P060356	P060357	P060355	P060354	P060353
P060356A	P060357A	P060355A	P060354A	P060353A

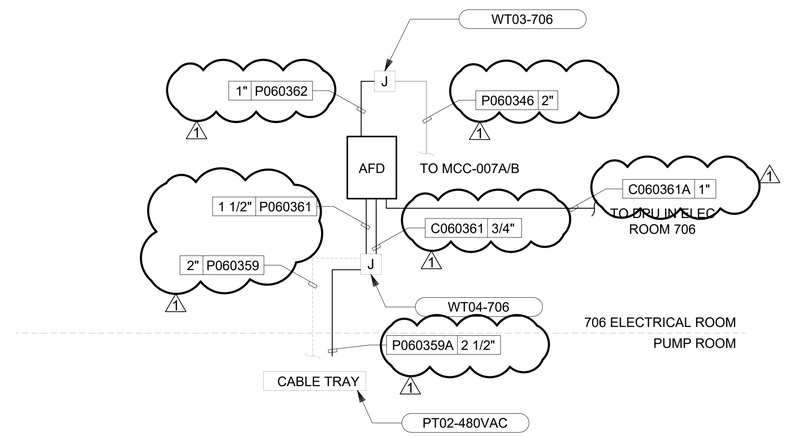

DETAIL B

1" = 1'-0"

706-ED-001

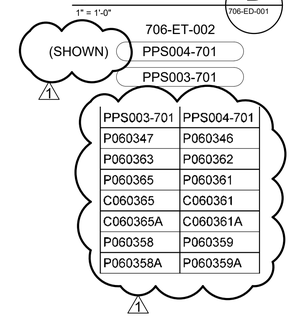

PPS003-701	PPS004-701
P060347	P060346
P060363	P060362
P060365	P060361
C060365	C060361
C060365A	C060361A
P060358	P060359
P060358A	P060359A

Designed by:	REV No.	DATE	DESCRIPTION	APPV
S. VANGALA	1	9/13/24	REVISED PER ADDENDUM 3	
Drawn by: H. CAMACHO				
Checked by: R. VIJAYENDRAN				

REVISION

CDM Smith
ONE ALLEGHENY SQUARE
NOVA TOWER 1, SUITE 200
PITTSBURGH, PA 15212
TEL: (412) 201-5500

METCO CONSULTING ENGINEERS

COMMONWEALTH OF PENNSYLVANIA REGISTERED PROFESSIONAL ENGINEER RAVIARAM VIJAYENDRAN No. PE085332 07/12/2024

alcosan allegheny county sanitary authority

ARLETTA SCOTT WILLIAMS
EXECUTIVE DIRECTOR, ALCOSAN

3300 PREBLE AVE.
PITTSBURGH, PA 15233
(412) 766 - 4810

www.alcosan.org

ALLEGHENY COUNTY SANITARY AUTHORITY
WASTEWATER TREATMENT PLANT
SOLIDS THICKENING AND DEWATERING IMPROVEMENTS

706-ED-001
ELECTRICAL
PRIMARY SLUDGE PUMP RISER DIAGRAMS

Contract: 1799
CAD File Name: 706-ED-001.DWG
Date: 07 / 11 / 2024
Sheet: 284 of 440

NOTES:

1. REFER TO SHEETS 706-ESL-0018, 706-ESL-002 FOR MCC BUCKETS INFORMATION.
2. REFER TO CONDUIT WIRE & CABLE SCHEDULE FOR WIRE SIZES.

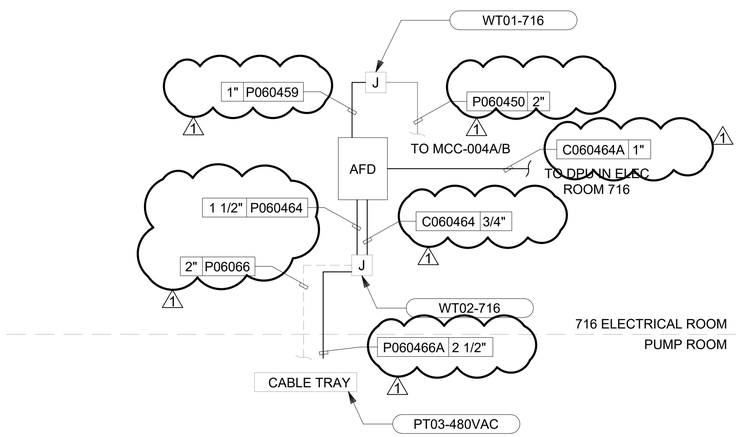

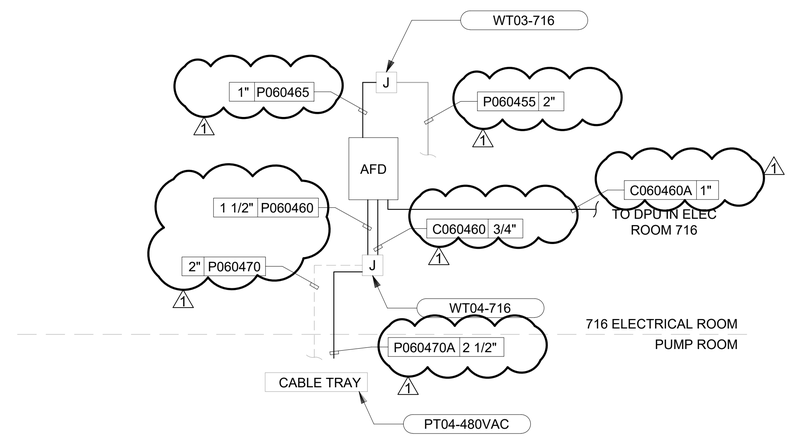

DETAIL A

1" = 1'-0" — 716-ET-001

716-ED-001

PPS004-711 (SHOWN)

(TYPICAL FOR PPS001-711 THRU PPS004-711)

PPS001-711	PPS002-711	PPS003-711	PPS004-711
P060450	P060451	P060452	P060453
P060459	P060458	P060457	P060456
P060464	P060463	P060462	P060461
C060464	C060463	C060462	C060461
C060464A	C060463A	C060462A	C060461A
P060466	P060467	P060468	P060469
P060466A	P060467A	P060468A	P060469A

DETAIL B

1" = 1'-0" — 716-ET-001

716-ED-001

PPS001-712 (SHOWN)

(TYPICAL FOR PPS001-712 THRU PPS002-712)

PPS001-712	PPS002-712
P060455	P060454
P060465	P060449
P060460	P060471
C060460	C060471
C060460A	C060471A
P060470	P060472
P060470A	P060472A

Designed by: S. VANGALA
Drawn by: N. MADERA
Checked by: R. VIJAYENDRAN

REVISION

REV No.	DATE	DESCRIPTION	APPV
1	9/13/24	REVISED PER ADDENDUM 3	

CDM Smith
ONE ALLEGHENY SQUARE
NOVA TOWER 1, SUITE 200
PITTSBURGH, PA 15212
TEL: (412) 201-5500

METCO CONSULTING ENGINEERS

COMMONWEALTH OF PENNSYLVANIA REGISTERED PROFESSIONAL ENGINEER R. VIJAYENDRAN No. PE085332 07/12/2024

alcosan allegheny county sanitary authority
ARLETTA SCOTT WILLIAMS
EXECUTIVE DIRECTOR, ALCOSAN
3300 PREBLE AVE.
PITTSBURGH, PA 15233
(412) 766 - 4810
www.alcosan.org

ALLEGHENY COUNTY SANITARY AUTHORITY
WASTEWATER TREATMENT PLANT
SOLIDS THICKENING AND DEWATERING IMPROVEMENTS

716-ED-001
ELECTRICAL
PRIMARY SLUDGE PUMP RISER DIAGRAMS

Contract: 1799
CAD File Name: 716-ED-001.DWG
Date: 07 / 11 / 2024
Sheet: 285 of 440

NOTE:

1. REFER TO SHEET 00-E-003 FOR CONDUIT AND WIRE SCHEDULE
2. REFER TO PLANVIEWS FOR CABLE TRAY LOCATIONS.
3. CONDUITS FOR MOTOR TERMINAL BOXES SHALL BE FLEXIBLE METAL CONDUITS. REFER TO CONDUIT SPECIFICATIONS FOR ADDITIONAL DETAILS.
4. REFER TO I&C SHEETS FOR SOLENOID AND FSL TAG NUMBERS. TYPICAL DESCRIPTION SHOWN IN ELECTRICAL PLAN.

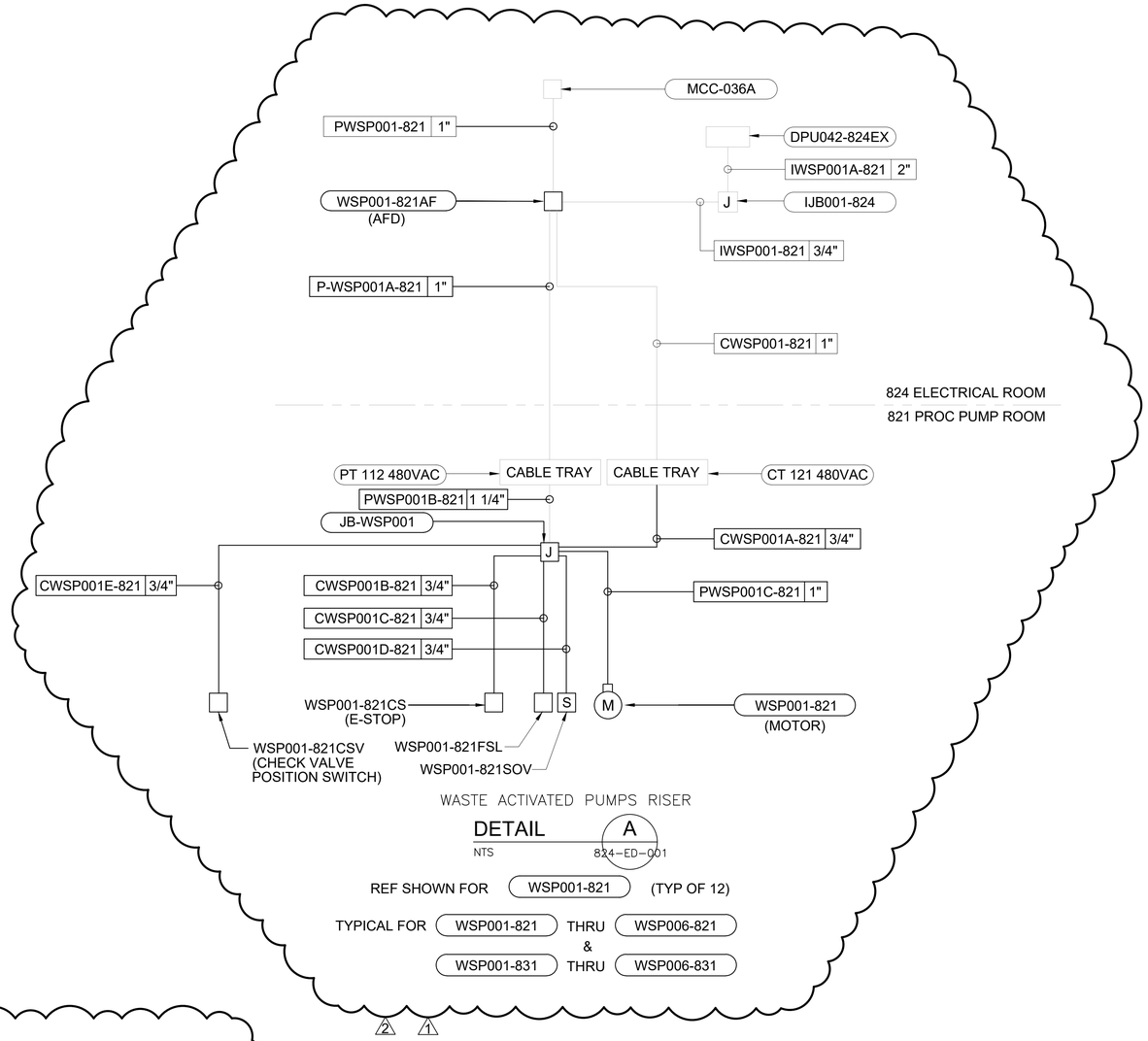

LEGEND:

CTLM001-400

*

* THE 3-DIGIT CONDUIT TAG I.D. NO. WILL CHANGE TO INCORPORATE THE EQUIPMENT TAG I.D. WHICH IT SERVES. (TYP ALL DETAILS) 1

Designed by:	REVISION			
S. VANGALA	REV No.	DATE	DESCRIPTION	APPV
Drawn by:	1	8/13/24	REVISED PER ADDENDUM 1	
H. CAMACHO	2	9/13/24	REVISED PER ADDENDUM 3	
Checked by:				
R. VIJAYENDRAN				

CDM Smith
ONE ALLEGHENY SQUARE
NOVA TOWER 1, SUITE 200
PITTSBURGH, PA 15212
TEL: (412) 201-5500

METCO CONSULTING ENGINEERS

COMMONWEALTH OF PENNSYLVANIA REGISTERED PROFESSIONAL ENGINEER RAJARAM VIJAYENDRAN No. PE085332 07/12/2024

alcosan allegheny county sanitary authority

ARLETTA SCOTT WILLIAMS
EXECUTIVE DIRECTOR, ALCOSAN

3300 PREBLE AVE.
PITTSBURGH, PA 15233
(412) 766 - 4810

www.alcosan.org

ALLEGHENY COUNTY SANITARY AUTHORITY
WASTEWATER TREATMENT PLANT
SOLIDS THICKENING AND DEWATERING IMPROVEMENTS

824-ED-001
ELECTRICAL
WASTE ACTIVATED SLUDGE PUMPS RISER

Contract: 1799
CAD File Name: 824ED001.dwg
Date: 07 / 11 / 2024
Sheet: 286 of 440